




CITY OF MILL VALLEY
REPORT OF BRIDGES AND CULVERTS CONDITION AND NEEDS ASSESSMENT

Submitted September 2, 2020

CONTENTS

TOPIC	PAGE
Executive Summary	1
Regional and Local Maps	2
Mill Valley Aerial with Locations of Structures	3
Introduction	4
Table 1 – Details of Mill Valley's System of Structures on Creeks and Tributaries	5
General and Specific Commentary	6
1. Condition of Bridges	7
• List of Critical Bridges	8
2. Condition of Culverts	13
3. Ownership and Jurisdiction	13
4. Conclusions	13
Structural Observation Reports	14

EXECUTIVE SUMMARY

This report is a general assessment of Mill Valley's structures that convey through them the arious creeks, tributaries and other features throughout the city, prepared after visiting and investigating each site. It provides detailed information about the existing facilities, their condition, deficiencies and order-of-magnitude costs to address the deficiencies. As such, the report may be used as a preliminary planning and budgeting tool for maintenance actions needed now, the next twenty years and beyond.

Of the 95 Mill Valley structures initially identified for observations, five City bridges on the National Bridge Inventory (NBI), inspected by Caltrans biennially, were not assessed. Additional structures were deleted in the field for not being in public right-of-way (ROW), being pipes in the local storm drain system, or otherwise not fitting the investigation's scope. By the same token, bridges and culverts were added that had not been evident from initial mapping, bringing the final total of qualified structures to 83, for which individual reports have been presented. ROW for a handful of the sites, noted in this report, will need to be further verified by the staff to ensure jurisdiction.

Of the above overall inventory of 83 structures, 49 were logged as bridges (58%) and 34 as culverts (42%). The bridges are made from concrete, wood or steel, or a combination of multiple materials, but mostly all-concrete. The culverts are corrugated metal pipes (CMPs), precast reinforced concrete pipes (RCPs), high-density polyethylene (HDPE) or concrete box culverts.

The bridges and wingwalls or retaining walls attached to them are mostly older, some perhaps nearly a century old, dating back to the decade of the Great Depression. Their materials, workmanship, engineering and construction technologies do not match today's standards. Also, geometric standards, environmental treatment and auto impact safety for bridges have changed vastly since then, making these bridges lack today's superior attributes. In spite of these factors and deficiencies, the bridges have served well for a long time, but now show their age. A vast number of them were found to have concrete defects, spalls, chips, breaks, cracks, abrasion, or wood decay. Many have broken invert slabs broken, creating obstacles in the flow. The foundations are vastly unknown, presumed to be shallow footings (sometimes no footings), and many have been undermined and abraded by the swift flows carrying aggregates. The barriers and railings have also been built to the old standards.

The bridge inventory's average qualitative health score comes to 50 (out of 100) and their average remaining life expectancy (also a qualitative value) is 26 years. An order-of-magnitude overall cost estimate to address the bridge deficiencies (for design, permitting, contruction and management) will be over $4 million. Seventeen critical bridges in the system require speedy attention and $2.23 million in expenditures. Generally, the culverts fared better and none made it to the critical list, but the older cast-in-place concrete ones have issues similar to their bridge counterparts,. Their overall average health score and remaining life expectancy is 74 and 36 years, respectively, requiring an expenditure north of $307,000 for repairs. The approximate total cost of addressing the system's needs will likely exceed $4.3 million.

To address the needs, a new infrastructure tax and local grants, a priority program developed by the City and its consulting engineers, and combined projects for economies of design and permitting on a programmatic basis, rather than individually, is likely necessary.

REGIONAL AND LOCAL MAPS





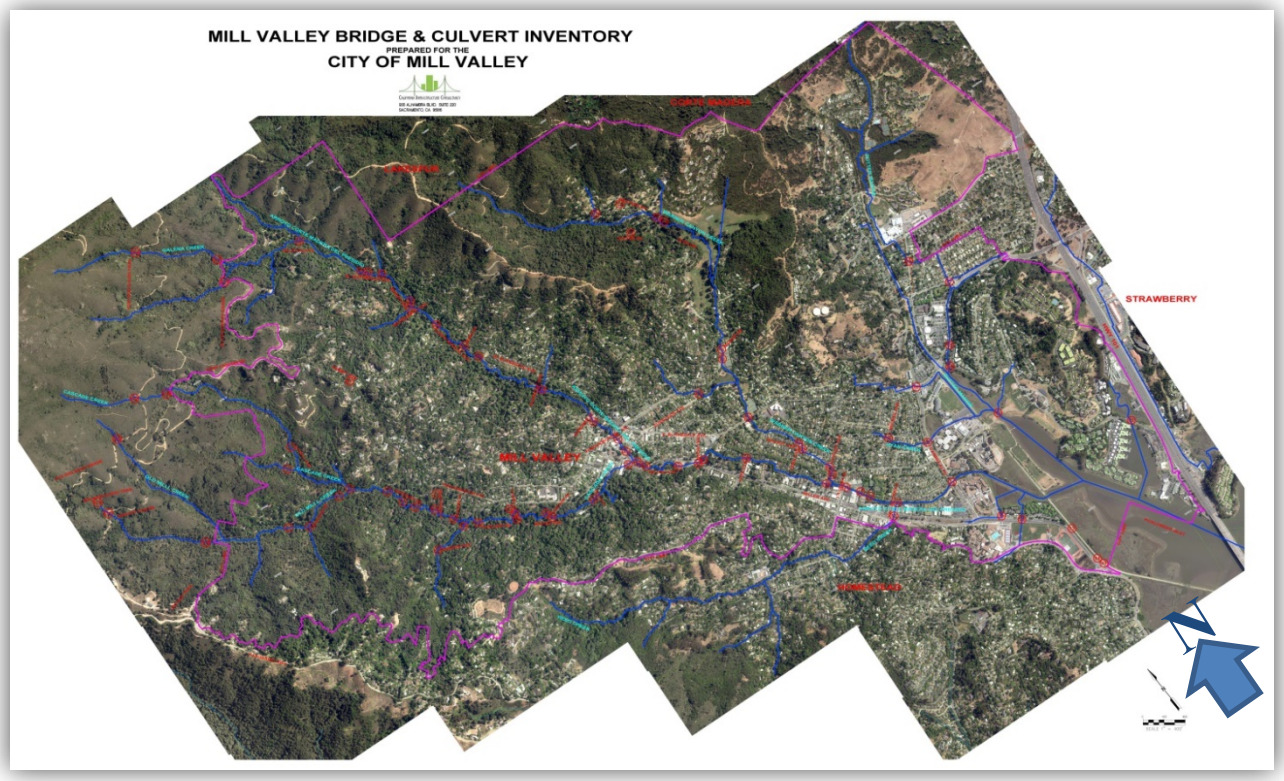

MILL VALLEY BRIDGE & CULVERT INVENTORY

PREPARED FOR THE

CITY OF MILL VALLEY

CALIFORNIA INFRASTRUCTURE CONSULTANCY
600 ALHAMBRA BLVD. SUITE 220
SACRAMENTO, CA 95816

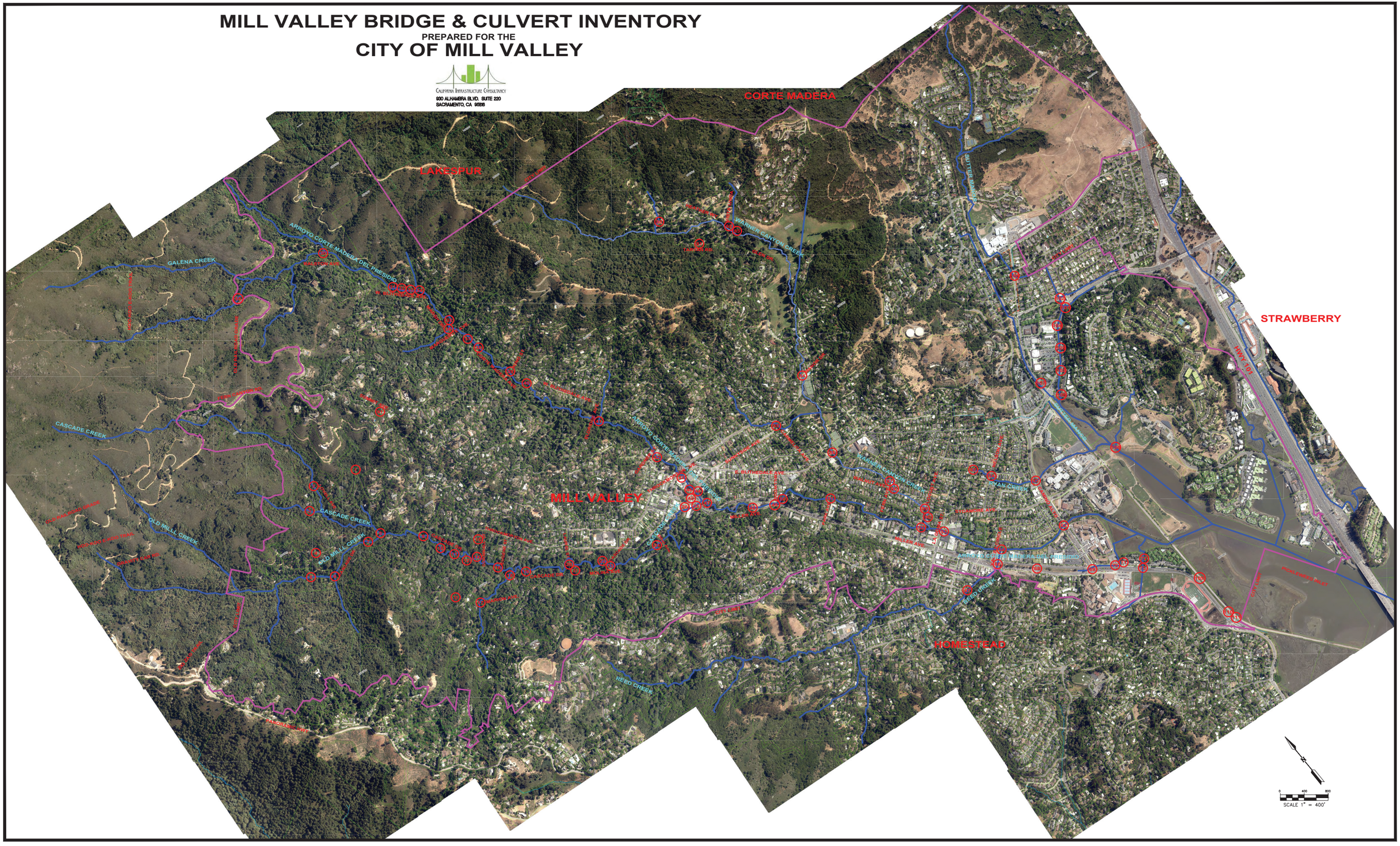

INTRODUCTION

For this report, the conditions of City of Mill Valley's street crossings over multiple creeks, tributaries or land features in the ROW have been assessed. The City is crisscrossed by several natural creeks, numerous tributaries, various other flow conveyance pathways or land features requiring grade separations. The watershed's major creeks, many of which join before flowing to San Francisco Bay via Bothin Marsh and Richardson Bay, are:

- Old Mill
- Cascade
- Arroyo Corte Madera Del Presidio
- Ryan Creek
- Warner Canyon
- Sutter Manor
- Galena

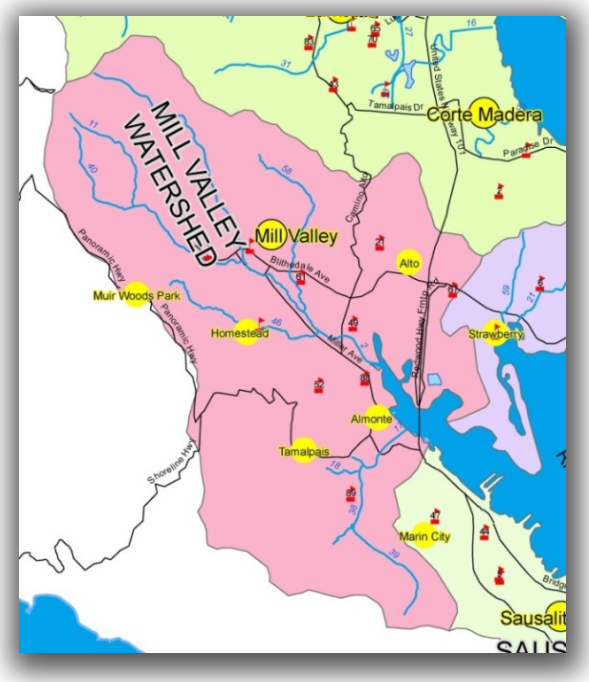

CIC initially identified some 95 bridges and culverts existing within the City limits, and ultimately verified 83 indeed being in public ROW. The creeks, the 83 numbered structures built over them and the City limits have been shown on the aerial of page 3.

Of the 83 structures, five bridges are in the National Bridge Inventory (NBI) and inspected by Caltrans biennially, for which Bridge Inspection Reports (BIRs) are prepared and submitted to the City. Therefore, these bridges were excluded from the investigations for obvious reasons. Of the remaining 90 or so structures, nearly seven were determined to be privately owned, storm drain pipes, or simply nonexistent, resulting in the 83 listed in Table 1 on page 5. For the numbering system shown in this table, blocks of numbers have been dedicated to structures on any given waterway, all of which may have not been utilized, allowing for future structures that may be added on the particular waterway. The report for each structure uses these assigned numbers.

For the project, uniform field observations were planned by developing a standardized form and a detailed list of elements to investigate. The multi-page form appears in this report for every structure visited. The observations were fashioned after the detailed Caltrans inspections that result in the BIRs, but are not as detailed. They include both topside and below street-level visual structural observations, where possible, as well as measurements and other evaluations.

The reports are accompanied with plenty of photos, especially of the troubled elements. They include narratives, location, the name of the waterway, construction materials, estimated age, super- and substructure characteristics, overall condition of the structure, listing of observable utilities, availability of detours, evidence of previous maintenance, embankments, erosion and scour, flow conditions, signs of aquatic life, qualitative structural adequacy score and estimate of remaining life expectancy, recommendations for repairs (where needed), urgency of the repairs, the timing of the repairs and an order-of-magnitude cost estimate, among other detailed data.

Table 1 – Details of Mill Valley's System of Structures on Creeks and Tributaries

Sequential No. of Inspected Bridge	Assigned Mill Valley Structure No.	Location			Determine Ownership & Jurisdiction	Bridge	Culvert	Year of As-builts	Fish Observed or Sign Posted	Structure Characteristics and Information					Qualatative Condition Score (0 - 100)	Estimate of Remaining Life (Years)	Required Repairs							Approximate Design, Environmental, Permitting and Construction (CON) Costs ($1,000s) + 10% Staff Cost					Recommended Priority			
		Address, Cross Street or Landmark	Road	Creek						L(ft)	W (ft)	Bridge Deck Area (Ft^2)	Use type	Struc type			None	Structural	Roadway	Railing or Guardrail	Misc.	Riprap	City Maintenance Crews Item	Design	Environmental and Permits	CON+CM	Total Project	CON Duration (Days)	Critical, Program Structure Now	Up to Next 5 to 10 Years	Next 10- 20 Years	Beyond 20 Years
1	**1**	# 665	Lovell Ave	Cascade			1			30			Vehicular	CMP	85	40	X							0	0	0	0				
2	**2**	# 750	Lovell Ave	Cascade			1			24			Vehicular	CMP	55	20	X							0	0	0	0				Replace CMP
3	**3**	# 800	Lovell Ave	Cascade			1			20			Vehicular	RCP	85	40	X							0	0	0	0				
4	**4**	# 800	Lovell Ave	Old Mill			1			30			Vehicular	2 RCPs	90	40	X							0	0	0	0				
5	**5**	# 501	Cascade Dr	Old Mill		1				9	21	189	Vehicular	Concrete Bridge	40	20		X	X					60	15	252	360	30	Adjacent Ret Wall			Replace Bridge
6	**6**	# 474	Cascade Dr	Old Mill			1			180			Vehicular	RCP	90	40	X						X	0	0	0	0				
7	**7**	# 422	Cascade Dr	Old Mill		1				14.5	23	333.5	Vehicular	Slab Bridge	50	30				X	X	X		10	10	35	61	5		X		Replace Bridge
8	**8**	Cascade Falls Trail	Cascade Dr	Cascade		1				6	52	312	Vehicular	Slab Bridge	60	30				X		X		10	0	42	57	6	Railings	X		Replace Bridge
9	**9**	# 131	Cascade Dr	Cascade		1				12	32	384	Vehicular	Slab Bridge	60	30						X		10	10	14	37	2		X		Replace Bridge
10	**10**	# 277	Cascade Dr	Cascade		1				12	18	216	Vehicular	Filled Arch Bridge	50	25		X						15	10	75	110	3			X	Replace Bridge
11	**11**	# 260	Cascade Dr	Cascade		1				13	32	416	Vehicular	Slab Bridge	50	25			X					15	0	42	63	2		X		Replace Bridge
12	**12**	At Wainwright	Cascade Dr	Cascade			1			27			Vehicular	RCB Culvert	90	40						X	X	0	0	5	5	2		X		
13	**13**	#20	Walwright Place	Cascade Tributary	X		1			23			Vehicular	RCB Culvert	80	40				X			X	5	0	14	21	2	Railings			
14	**14**	# 224	Cornwall St	Cascade		1				13	20	260	Vehicular	Slab Bridge	50	25			X					15	0	40	61	3		X		Replace Bridge
15	**15**	# 25	Cornwall St Driveway	Cascade			1			31			Vehicular	CMP/RCB Culvert	80	40	X							0	0		0					
16	**16**	# 202	Eugene St	Old Mill		1				15	30	450	Vehicular	Slab Bridge	45	20		X		X				10	0	28	42	5		X		Replace Bridge
17	**17**	At Earnscliff Trail	Cascade Dr @ Marion	Cascade			1			42			Vehicular	RCB Culvert	80	40							X	0	0		5	2		X		
18	**18**	# 202	Cascade Dr	Cascade		1				12	30	360	Vehicular	Slab Bridge	55	20	X							0	0	0	0				Replace Bridge
19	**19**	# 160	Cascade Dr	Cascade		1				14	18	252	Vehicular	Filled Arch Bridge	50	25		X		X				10	10	35	61	2			X	Replace Bridge
20	**20**	# 84	Laurel Ave / Cascade Dr	Cascade		1				15	18	270	Vehicular	Filled Arch Bridge	20	10		X		X			X	60	15	154	252	12	Bridge			Replace Bridge
21	**21**	# 84	Laurel Ave / Cascade Dr	Cascade		1				40	4	160	Pedestrian/Bike	Wood Bridge	65	25		X		X				10	0	14	26	2	Wood Dry Rot & Decay	X		Replace Bridge
22	**22**	Old Mill Park	Molina Ave / Cascade Way	Cascade		1			Sign Posted	12	18	216	Vehicular	Filled Arch Bridge	20	10		X		X			X	60	15	140	237	12	Bridge	X		Replace Bridge
23	**23**	Old Mill Park	Molina Ave / Cascade Way	Cascade		1			Sign Posted	64	4.5	288	Pedestrian/Bike	Wood / Steel Bridge	75	30					X		X	10	15	21	51	3		X		
24	**24**	# 11 Ethel	Ethel Ave	Old Mill		1				13	18	234	Vehicular	Filled Arch Bridge	10	10				X		X		60	15	168	267	15	Bridge & Scour	X		Replace Bridge
25	**25**	#34	Miller Ave	Cascade	X	1	1		Observed	270	10	2700	Vehic. & Bldgs.	Bridge & Culvert	40	20				X		X	X	85	15	210	341	15	Bridge & Scour	X		
26	**26**	#34	Miller Lane	Cascade	X	1	1			95	9	855	Vehic. & Bldgs.	Bridge & Culvert	60	40				X		X		40	10	60	121	5		X		
27	**30**	At W. Blithedale	Ralston Ave	Corte Madera			1			24		0	Vehicular	RCP	70	35					X		X	0	0	10	11	3		X		
28	**31**	At W. Blithedale	W. Blithedale Ave	Corte Madera		1				12.5	14.5	181.25	Vehicular	Wood/Conc Bridge	65	30	X							0	0	0	0					
29	**32**	At Old RR Grade	W. Blithedale Ave	Corte Madera		1				15	22	330	Vehicular	Slab Bridge	50	20		X		X		X		20	10	40	77	4				
30	**33**	At Lee Ave	W. Blithedale Ave	Corte Madera Trib			1			28		0	Vehicular	HDPE Pipe	95	40	X							0	0	0	0					
31	**34**	# 412	W. Blithedale Ave	Corte Madera		1				10	24	240	Pedestrian/Bike	Slab Bridge	5	3		X		X		X	X	10	15	42	74	6	Replace Bridge	X	Replace Bridge	
32	**35**	At Marsh Drive	W. Blithedale Ave/ Marsh Dr	Corte Madera		1				15	20	300	Vehicular	Slab Bridge	40	15		X		X		X		20	5	40	72	10				Replace Bridge
33	**36**	At Marsh Drive	W. Blithedale Ave	Corte Madera		1				18	24-36	540	Vehicular	Slab Bridge	40	25		X		X		X	X	20	5	40	72	4		X		Replace Bridge
34	**37**	At W. Blithedale	Marguerite Ave	Corte Madera		1				8	37	296	Vehicular	Filled Arch Bridge	45	30		X				X		10	0	21	34	3		X		
35	**38**	# 350	Corte Madera	Corte Madera		1				19	22	418	Vehicular	Slab Bridge	55	25				X				0	0	8	10	2		X		
36	**39**	At Corte Madera	W. Blithedale Ave / King St.	Corte Madera		1				12.3	17.3	212.79	Vehicular	Slab Bridge	40	10		X		X				20	5	40	72	5		X		
37	**40**	# 193	Winwood	Corte Madera		1				13	10	130	Vehicular	Wood/Conc Bridge	80	35						X	X	10	0	15	28	4		X		
38	**41**	# 8	Eldridge Ave	Corte Madera		1				16	18	288	Vehicular	Filled Arch Bridge	35	20		X	X	X	X	X		30	10	55	105	5	Approach Road Cavity	X		Replace Bridge
39	**42**	Corte Madera Ave	Gardner St	Corte Madera		1				13.3	29	385.7	Vehicular	Filled Arch Bridge	30	15		X		X	X	X		30	15	76	133	4		X		Replace Bridge
40	**43**	#57	Throckmorton Ave	Corte Madera		1				16.8	63.3	1063.44	Vehicular	Slab/Beam/Wood	40	30		X	X	X				40	10	90	154	5		X		
41	**44**	#12	Sunnyside Ave	Corte Madera		1				19.5	60	1170	Vehicular	Filled Arch Bridge	65	40			X	X				0	0		0			X		
42	**45**	# 33	@ Sunnyside & Miller	Corte Madera			1		Observed	115	7	805	Buildings	RCP	70	20	X					X		0	15		17		Retaining Wall Scour-See Struc. #25	X		
43	**46**	Sunnyside	Ped Bridge off Sunnyside	Corte Madera		1				13.5	5	67.5	Ped / Bike	Wood Bridge	70	40					X		X	0	0	5	6	1		X		
44	**47**	Cleaners	Miller Ave - Westbound	Corte Madera		1				19	53	1007	Building	Conc/Wood Bridge	65	30		X		X				12	0	32	48	3	Timber Deck Beams			
45	**48**	MV Lumber Co	Ped Bridge to Shops	Corte Madera		1				32	16	512	Ped / Bike	RC Slab	75	40		X			X			12	15	60	96	4		X		
46	**49**	#10	Millwood St	Corte Madera		1				19.5	30.8	600.6	Vehicular	RC Slab	60	40				X				10	5	28	47	4			X	
	50		**Miller Ave Br No. 27C-0046, Caltrans inspection**																													
47	**51**	At Miller	Park Ave	Corte Madera		1			Sign Posted	16.0	39.5	632.0	Vehicular	Filled Arch Bridge	30	30				X		X		20	15	32	74	4		X	X	
	52		**Locust Ave Bridge No. 27C-0065, Caltrans inspection**																													
	53		**Lagoma Ave Bridge No. 27C-0140, Caltrans inspection**																													
48	**54**	#469	Valley Circle	Corte Madera		1				46.0	4.7	216.2	Ped / Bike	Steel Truss on Conc	90	60	X							0	0	0	0					
49	**55**	~ ½ mile of trailhead	Old RR Grade Trail Fire Road	Corte Madera	X		1			100		0	Ped/Bike /Fire	Culvert	80	40								0	0	0	0					
	62		**Camino Alto, S. of Sycamore, Bridge No. 27C-0030, Caltrans inspection**																													
50	**63**	Sycamore	Camino Alto, N. of Sycamore	Ryan Creek		1				12	90	1080	Vehicular	RC Slab	75	50	X							0	0	0	0					
51	**64**	# 52	Nelson Ave	Ryan Creek			1			350			Vehicular, Homes	RCP	90	50	X							0	0	0	0					
52	**65**	# 55	Amiciata Avenue	Ryan Creek			1			34			Vehicular	RCPs (2)	90	50							X	0	0	0	1					
53	**66**	#459	Miller Ave	Reed			1			292			Vehicular/Ped	RCB Culvert	75	40				X			X	0	0	5	1	1	X			
54	**67**	#28	Reed	Reed			1			16.7			Vehicular	RCB Culvert	60	40		X						2	0	10	13	3			X	
55	**68**	#507	Miller	Reed		1				20.9	8.3	173.47	Ped / Bike	Wood	90	40							X	0	0	0	1					
56	**69**	#507	Miller Ave	Reed			1			66			Vehicular	RCB Culvert	90	40							X	0	0	0	1					
57	**70**	# 631	Miller Ave	Trib			1			56.8			Vehicular	RCB Culvert	70	40							X	0	0	0	2					
58	**71**	Redwood Sr. Res.	Miller Ave	Trib			1			21			Ped / Bike	RCP Culverts (2)	80	50				X			X	0	0	0	2					
59	**72**	Camino Alto	Miller Ave	Trib			1			300			Vehicular	Double RCB Culvert	60	25			X	X			X	10	0	25	39	4		X			
60	**73**	MV HS	Miller Ave	Trib Corte Madera			1		Observed	115			Vehicular	RCPs (2)	90	40	X							0	0	0	0					
61	**80**	# 34	Glen Dr	Warner Canyon			1			50.0			Vehicular	Lined RCP/CMP	90	50							X	0	0	0	1					
62	**81**	# 10 Tartan Rd	Tartan Rd	Warner Canyon			1			35.0			Vehicular	RCPs (2)	60	40		X		X			X	5	0	21	29	3				
63	**82**	# 10 Tartan Rd	Vista Linda Dr	Warner Canyon			1			45.0			Vehicular	RCPs (2)	60	30		X		X	X		X	6	0	28	37	4				
64	**83**	Vista Linda Park	Vista Linda Dr	Warner Canyon		1				71	8.7	617.7	Ped / Bike	Steel Truss	75	50		X						0	0	7	8	1	Deck Planks			
65	**84**	Manor	Manor Dr	Warner Canyon			1			37			Vehicular	RPC Culvert	60	30				X	X		X	4	0	20	26	4		X		
66	**85**	at Buena Vista	Carmelita Ave	Warner Canyon			1			150			Vehicular, Homes	CMP/RCP	85	40						X	X	0	0	5	6	1			X	
67	**86**	#307	E. Blithedale Ave	Warner Canyon		1				14	48.5	679	Vehicular	RC Slab	60	30		X				X	X	14	0	70	92	5		X		
68	**87**	Catalpa	Fern Ave	Warner Canyon		1				17	34	578	Vehicular	RC Slab	40	15		X					X	16	5	42	69	4	Concrete Repairs			
69	**88**	# 107	Walnut Ave	Warner Canyon		1				16	34.5	552	Vehicular	RC Slab	30	20		X		X			X	16	5	56	85	4	Concrete Repairs			
70	**89**	Locust	Locust Ave	Warner Canyon		1				17	34	578	Vehicular	RC Slab	30	20		X		X			X	26	5	70	111	5	Concrete Repairs			
71	**90**	# 44	Sycamore Ave	Warner Canyon		1				15.1	33.5	505.9	Vehicular	RC Slab	20	15		X	X	X	X		X	18	5	35	64	5		X		
	91		**Summit Ave Br No 27C-0052, Caltrans inspection (As-Builts Available)**																													
72	**100**	#110	Lomita Ave	Sutter Manor			1			38.0			Vehicular	RCB Culvert	70	40		X					X	0	0	21	23	3		X		
73	**101**	at E. Blithedale	Ashford	Sutter Manor			1			54.0			Vehicular	Double RCB Culvert	50	30			X	X		X	X	0	0	14	15	2		X		
74	**102**	at Ashford	E. Blithedale	Sutter Manor			1			54.0			Vehicular	RCB Culvert	70	30				X			X	0	0	15	17	5		X		
75	**103**	#731	E. Blithedale	Sutter Manor		1				14.7	56	823.2	Vehicular	RC Slab	50	25		X		X			X	5	0	14	21	2	Guardrail	X		
76	**104**	#715	E. Blithedale	Sutter Manor		1				16.7	300.0	5010.0	Vehicular	RC Slab	40	15				X			X	10	10	35	61	5		X		
77	**105**	#745	E. Blithedale	Sutter Manor			1			55.0			Vehicular	2 RCPs	50	15				X			X	5	0	25	33	7		X		
78	**106**	#700	E. Blithedale	Sutter Manor		1				16.0	54.0	864.0	Vehicular	RC Slab	50	20				X			X	10	10	28	53	4		X		
79	**107**	at Lomita	E. Blithedale	Sutter Manor			1			70.0		0.0	Vehicular	RCP	60	40							X	0	0	0	1					
80	**108**	at Bothin Bay	Bayfront-Hauke Park	Pickleweed Inlet		1		1974		170.0	11.5	1955.0	Ped / Bike	Wood	70	30		X		X			X	5	0	14	21	2		X		
81	**109**	at Miller	Miller Ave	Corte Madera Trib		1		2016		29	7.8	226.2	Ped / Bike	Steel Beam/Wood Deck	50	10		X		X				30	10	82	134	2	Bridge Repair			
82	**110**	at Miller	Miller Ave	Corte Madera Trib			1			20.0			Ped / Bike	CMP	60	20							X	0	0	0	1					
83	**111**	at Miller	Miller Ave	Corte Madera Trib			1			20.0			Ped / Bike	RCP	80	35				X			X	0	0	0	1					
Total																								931	315	2,625	4,271					

Table 2 – Details of Mill Valley's Structures in Critical Condition

Sequential No.	Assigned Mill Valley Structure No.	Location			Determine Ownership & Jurisdiction	Bridge	Culvert	Year of As-builts	Fish Observed or Sign Posted	Structure Characteristics and Information					Qualatative Condition Score (0 - 100)	Estimate of Remaining Life (Years)	Required Repairs							Approximate Design, Environmental, Permitting and Construction (CON) Costs ($1,000s) + 10% Staff Cost					Recommended Priority			
		Address, Cross Street or Landmark	Road	Creek						L(ft)	W (ft)	Bridge Deck Area (Ft^2)	Use type	Struc type			None	Structural	Roadway	Railing or Guardrail	Misc.	Riprap	City Maintenance Crews Item	Design	Environmental and Permits	CON+CM	Total Project	CON Duration (Days)	Critical, Program Structure Now	Up to Next 5 to 10 Years	Next 10- 20 Years	Beyond 20 Years
1	**5**	# 501	Cascade Dr	Old Mill		1				9.0	21.0	189.0	Vehicular	Concrete Bridge	40	20		X	X					60	15	252	360	30	Adjacent Ret Wall			Replace Bridge
2	**8**	Cascade Falls Trail	Cascade Dr	Cascade		1				6.0	52.0	312.0	Vehicular	Slab Bridge	60	30				X		X		10	0	42	57	6	Railings	X		Replace Bridge
3	**13**	#20	Wainwright Place	Cascade Tributary	X		1			23.0			Vehicular	RCB Culvert	80	40							X	5	0	14	21	2	Railings			
4	**20**	# 84	Laurel Ave / Cascade Dr	Cascade		1				15.0	18.0	270.0	Vehicular	Filled Arch Bridge	20	10		X		X			X	60	15	154	252	12	Bridge			Replace Bridge
5	**21**	# 84	Laurel Ave / Cascade Dr	Cascade		1				40.0	4.0	160.0	Pedestrian/Bike	Wood Bridge	65	25		X		X				10	0	14	26	2	Wood Dry Rot & Decay	X		Replace Bridge
6	**22**	Old Mill Park	Molina Ave / Cascade Way	Cascade		1			Sign Posted	12.0	18.0	216.0	Vehicular	Filled Arch Bridge	20	10		X		X			X	60	15	140	237	12	Bridge	X		Replace Bridge
7	**24**	# 11 Ethel	Ethel Ave	Old Mill		1				13.0	18.0	234.0	Vehicular	Filled Arch Bridge	10	10				X		X		60	15	168	267	15	Bridge & Scour	X		Replace Bridge
8	**25**	#34	Miller Ave	Cascade	X	1	1		Observed	270.0	10.0	2700.0	Vehic. & Bldgs.	Bridge & Culvert	40	20				X		X	X	85	15	210	341	15	Bridge & Scour	X		
9	**34**	# 412	W. Blithedale Ave	Corte Madera		1				10.0	24.0	240.0	Pedestrian/Bike	Slab Bridge	5	3		X		X		X	X	10	15	42	74	6	Replace Bridge	X	Replace Bridge	
10	**41**	# 8	Eldridge Ave	Corte Madera		1				16.0	18.0	288.0	Vehicular	Filled Arch Bridge	35	20		X	X	X	X	X		30	10	55	105	5	Approach Road Cavity	X		Replace Bridge
11	**45**	# 33	@ Sunnyside & Miller	Corte Madera			1		Observed	115.0	7.0	805.0	Buildings	RCP	70	20	X					X		0	15		**17**		Retaining Wall Scour-See Struc. #25	X		
12	**47**	Cleaners	Miller Ave - Westbound	Corte Madera		1				19.0	53.0	1007.0	Building	Conc/Wood Bridge	65	30		X		X				12	0	32	48	3	Timber Deck Beams			
13	**83**	Vista Linda Park	Vista Linda Dr	Warner Canyon		1				71.0	8.7	617.7	Ped / Bike	Steel Truss	75	50		X						0	0	7	**8**	1	Deck Planks			
14	**87**	Catalpa	Fern Ave	Warner Canyon		1				17.0	34.0	578.0	Vehicular	RC Slab	40	15		X					X	16	5	42	**69**	4	Concrete Repairs			
15	**88**	# 107	Walnut Ave	Warner Canyon		1				16.0	34.5	552.0	Vehicular	RC Slab	30	20		X		X			X	16	5	56	**85**	4	Concrete Repairs			
16	**89**	Locust	Locust Ave	Warner Canyon		1				17.0	34.0	578.0	Vehicular	RC Slab	30	20		X		X			X	26	5	70	**111**	5	Concrete Repairs			
17	**103**	#731	E. Blithedale	Sutter Manor		1				14.7	56.0	823.2	Vehicular	RC Slab	50	25		X		X			X	5	0	14	**21**	2	Guardrail	X		
18	**109**	at Miller	Miller Ave	Corte Madera Trib		1		2016		29.0	7.8	226.2	Ped / Bike	Steel Beam/Wood Deck	50	10		X		X				30	10	82	**134**	2	Bridge Repair			
Total																								495	140	**1,394**	**2,232**					

LEGEND: Critical Bridge Inspected | NBI Bridge | Inspected

GENERAL AND SPECIFIC COMMENTARY

Generally, every investigated facility is labeled a structure in this report. The structure has been named a bridge primarily if it is configured like one and its topside is the travel way, whether it is paved or the original deck material (concrete or wood). This category also includes pedestrian/bike facilities. They were labeled culverts when they are round, square or rectangular in cross section, and surrounded by soil on all sides. There are few crossovers among these. Among other data, both the length and width have been listed for the bridges since both have significance, whereas for culverts only the length is presented as the more important attribute, while the diameter (or width) is also listed. Nearly, sixty percent of the structures surveyed are bridges and the remaining forty percent are culverts.

Mill Valley's structures are generally older. Our survey shows nearly 83 sites in the system, housing 50 bridges and 33 culverts, with two sites having both, ratcheting the culverts tally to 35 total. Although we did not have as-builts for a vast majority of the structures, we surmised their ages based on their construction features, such the forming used for the concrete bridges and the condition of the structure. Structures are usually given 50-year service lives for design purposes, but are often in service longer, sometimes twice as long. We noticed a vast majority of the structures, especially the concrete bridges, were upwards of 80 years old, some possibly reaching 100.

1. CONDITION OF BRIDGES - The vintage of the structures is important. The older wooden ones have long been replaced or rehabilitated. Also, not many steel structures have been built on the West Coast, for not being economical, to have surviving examples in this region (other than the Golden Gate and Bay Bridge class of bridges.) This leaves us with a chiefly older concrete bridges. Mill Valley's bridge inventory amounts to over 30,100 square feet in deck surface. The average remaining life expectancy of all Mill Valley bridges, a qualitative and visually assessed number based on field observations, comes to 26 years. Therefore, theoretically, all or many of the structures surveyed would need to be replaced between now and, say approximately, 30 years from now. In today's market, the total cost can easily reach $30 million for replacement of the entire system.

Also, our solely visual and qualitative average health score for the inventory's bridges comes to 50 (out of 100). Until recently, this used to be the threshold value for the NBI bridges, albeit evaluated differently, below which the federal programs required bridge rehabilitation or replacement. In other words, on the average, almost all of Mill Valley's bridges need one of the either action.

Given these issues, we often observed defects, such as sections of concrete "rock pockets" (semi-hollow concrete areas from improper consolidation during the original pour), cracks, spalls, chips and abrasion, as well as scour. Generally, the common issues for the older bridges in Mill Valley can then be summarized and described as follows:

- Functioning structures designed and built with older science and technology
- Low reinforcement ratio, Low quality concrete, and lower labor skills used
- Abrasive and high-velocity peak flows
- Shallow foundations, erosion and scour
- Concrete inverts complicating fish travel
- Absent a specific maintenance program

Design and Construction Technology - Much of Mill Valley's bridges have their engineering and construction dating back to the Great Depression era, having been built with poorer materials and unskilled labor for economic

stimulation through public works projects at the time. The concrete mix is usually of low quality, not having been consolidated properly during the pour (showing rock pockets). Because of that era's concrete quality and relatively low compressive strength, the structural elements may be too bulky for what they accomplish and the spans are shorter, requiring more intermediate supports in the creeks. Often, the concrete has too little reinforcement (or none). The city's terrain is relatively steep and the flow velocities relatively high, carrying rocks and other abrasive materials in them, damaging the concrete where it comes in contact with the flows. The interface between the bridge and earth is often unprotected and the soil types and flow velocities have resulted in scour, or undermining of the supports.

Foundations – By definition, foundations are usually below the surface, hidden and hard to observe without excavation. Rock outcrop may be near the surface regionally, and we believe many or all of the bridges we observed were not on deep foundations (piling), but on shallow spread footings. We do not believe extensive geotechnical investigations or seismic considerations were in place when the bridges were constructed. The bridge and wall foundations may be vulnerable, made more so by decades of scour erosion and flow abrasion.

Erosion and Foundation Scour - Many of these bridges have inverts, which is a concrete slab on the creek bed thoughout the bridge's footprint. We believe the inverts may have been constructed to protect the shallow bridge foundations. Often, they were not made monolithic with the abutments in the older practice and poor concrete quality, lack of reinforcement and forces of water flow have broken them up to pieces in many locations. As such, much of them are now creek riffle, causing locally high velocities that contribute to foundation scour, negating what they were constructed for in the first place. Inverts are mostly a no-no in the current lexicon of bridges over waterways for their adverse impact on fish travel and spawning.

Seismic Conditions - When it comes to seismic conditions, there is some reprieve. The bridges in Mill Valley are smaller and mostly single-span, both desirable seismic traits. They are not massive inverted "lollypops," shaking with their concentrated weights suspended in the air, which would render them more prone to collapse. They are mostly level with the surrounding terrain, boxed by two abutments and monolithic, all generally better and safer for seismic loads.

That said, it is not always easy to separate the preexisting distress from seismic events and everyday wear-and-tear. We attribute some of the distress in the bridges, especially in the older earth-filled arch bridges, to seismic events over the past decades. The distress may be mainly in form of cracks in the super- and substructure, as well as in the walls and foundations. The distress in a handful of the filled arches is specifically discussed in the individual reports and Critical Bridges here.

Concrete Bridge Decks - The bridge decks in Mill Valley are mostly paved over. Asphalt concrete (AC) is porous and not a seal, trapping moisture under it. If the deck concrete is weaker and has cracked over time, the moisture would run through the cracks and leach out the concrete chemicals, manifesting as efflorescence (the multi-colored stain on the soffit of the deck). This condition, often not detected because of concealment by the AC, exacerbates the concrete problems unless the bridge deck's underside is inspected periodically. The modern practice, with normally higher available concrete compressive strengths (between 3,250 and 4,000 psi, or higher), is to

not pave the deck and use the concrete for travel surface. Nowadays, the DOTs are removing the AC from bridge decks, sealing them with either methacrylate or in its combination of polyester concrete.

Barriers and Railings – We noticed general distress in concrete barriers, mostly due to age, quality of concrete, low reinforcement ratio and vehicular impact. Because of the generally low speed of travel on the city streets, incidents of vehicular damage appear to be rare and damage is mostly attributable to other above factors.

The City has utilized a multitude of barrier and railing types, materials and designs over the decades. In some cases, a railing is completely absent. Practically, none of the barriers would meet today's crash test standards. Due to the prevalence of SUVs and the severity of impacts by these vehicles, Caltrans has changed even the more recent and stronger safety barrier designs, heights and geometry. Again, because of the lower speeds, barrier impacts by cars are usually not severe here and mostly fender-benders, although we have seen one incident of severe impact to a bridge by a car (Structure No. 109 on Miller Avenue by Mill Valley High School).

Many of the barriers on the bridges in the system do not meet today's height and fall-through prevention standards, a more noticeable deficiency than their crash-worthiness. The report has identified many such barrier rails for future updates when any work on or revision to them is planned.

Wood Bridges – The timber bridges in the system fared relatively well, with isolated issues here and there. However, access and height usually prevents detailed inspection of their undersides. Even though their issues are not as urgent as those of the recently repaired Hauke Park Bridge, we recommend implementation of a specific inspection of the wood bridges identified in this report, particularly those on the critical list, to address their potential wood decay issues.

Critical Bridges in the System – Tables 1 and 2 on page 5 provide approximate timelines for addressing the structural issues, including those of critical bridges requiring attention now. Seventeen critical sites (including 18 structures) have been presented in this report and discussed briefly below as well. Note that one structure is not a bridge but an adjacent retaining wall, and two of the critical bridges are already under advisement. For full details of each numbered structure, observations and recommendations, please see the Observation Reports section.

The order-of-magnitude cost estimate for repairing the critical bridges, including design, environmental process and permits, construction and management will be over $2.23 million. Similar estimate for overall cost of repairing all of the bridges, including the non-critical ones, will be over 4 million.

Adjacent to Mill Valley Structure No. 5
Location: Near No. 501 Cascade Drive
Issue: Badly Decayed Timber Soldier Piles

The timber soldier-pile retaining wall at the edge of the creek, with stacked horizontal concrete piles for lagging, supports Cascade Drive and has soldier piles badly decayed at the top several feet. Its failure would be very impactful to both the road and creek. Repair or replace the wall with a sidehill viaduct.
Construction-only Cost Estimate: $480 K

Mill Valley Structure No. 8

Location: At Cascade Falls Trail, Cascade Dr.

Issue: Absent Bridge Railings & Handrails



This concrete bridge is located at the confluence of Cascade and Old Mill Creeks, and at the Cascade Falls Trailhead, where off-road parking is provided. While the bridge itself is not critical, it lacks railing at both edges to prevent falls and bodily harm. Install 42” high total railings and hand rails.

Construction-only Cost Estimate: $42 K

Mill Valley Structure No. 13

Location: Near No. 20 Wainwright Place

Issue: Railings Absent at Drop-off



This is the site of a relatively small RCB culvert under a driveway leading to several homes, supporting both pedestrian and vehicular traffics. The 8- to 10-foot high drop off is not protected with any railing. The ownership of the ROW must be confirmed and 42”-high railings installed by the owner.

Construction-only Cost Estimate: $14 K

Mill Valley Structure No. 20

Location: Near No. 84 Cascade Drive

Issue: Severe Concrete Arch Bridge Cracks



The earth-filled concrete arch bridge has developed severe vertical and horizontal cracks on its downstream headwall, likely caused by age, settlement, truck overloads and water increasing weight and pressure. All exposed concrete surfaces must be encased with 6” thick reinforced concrete layer.

Construction-only Cost Estimate: $154 K

Mill Valley Structure No. 21

Location: Near No. 84 Cascade Drive

Issue: Wood Deck Plank Dry Rot



This pedestrian bridge is in general good health, but has wood deck plank decay issues that should be addressed before becoming worse. Since this is a primarily timber bridge, and well-used by pedestrians, a full, detailed inspection of all wooden elements, followed by repairs, is recommended.

Construction-only Cost Estimate: $14 K

Mill Valley Structure No. 22

Location: Cascade Way at Old Mill Park

Issue: Severe Concrete Bridge Cracks



This well-used earth-filled arch bridge has developed severe vertical and angled cracks on both headwalls, likely caused by age, poor quality concrete, settlement, water retention and truck overloads. All exposed surfaces of concrete must be encased with a 6" deep layer of reinforced concrete.

Construction-only Cost Estimate: $140 K

Mill Valley Structure Nos. 25 and 45

Location: No. 34 Miller Avenue

Issue: Concrete Cracks, spalls, Abrasion, Scour



The bridge/culvert No. 25 includes four construction vintages. Concrete in the oldest segments of the filled arch and slab deck is in poor shape and needs to be encased. Also, at the outlet, the wingwalls (common with Mill Valley Structure No. 45) are badly scoured and need to be protected with riprap.

Construction-only Cost Estimate: $210 K

Mill Valley Structure No. 24

Location: Near No 11 Ethel Way

Issues: Acute Concrete Cracks, Abrasion, Scour



The headwalls in this earth-filled arch bridge are cracked extensively and the archway areas exposed to flows are badly abraded due to poor quality original concrete, settlements age, truck overloads, water retention, and flows. All exposed concrete surfaces must be encased with a 6" reinforced concrete layer.

Construction-only Cost Estimate: $168 K

Mill Valley Structure No. 34

Location: Near 412 W. Blithedale

Issue: Bridge Abutment and Bank Failure



One abutment of this concrete bridge on a footpath has mostly collapsed, having released the slope behind it, creating a hole behind the wall. The concrete quality is poor and it lacks rebar. The fallen abutment needs to be temporarily restored and backfilled with rock and soil before bridge replacement.

Construction-only Cost Estimate: $42 K

Mill Valley Structure No. 41

Location: Near No. 8 Eldridge Avenue

Issue: Large Cavity at Edge of Approach Road



This earth-filled arch has concrete distress problems due to its age, poor quality concrete and abrasion, to be addressed in the longer-term. The more urgent issue is an earth cavity having exposed its upstream right approach roadway edge, threatening a sink-hole-like roadway failure. Fill and retain with riprap.

Construction-only Cost Estimate: $35 K

Mill Valley Structure No. 47

Location: At Miller Ave, near Vogue Cleaners

Issue: Bridge Timber Deck Beam Fungus



The timber-joisted deck bridge, on concrete abutments and surfaced with AC, is located on WB Miller Ave and has fungus growth and water stain on its joists. Furthermore, the railing posts on top have decayed severely. A detailed inspection for repair and treatment of any decayed wood is recommended.

Construction-only Cost Estimate: $28 K

Mill Valley Structure No. 83

Location: Vista Linda Park

Issue: Ped Bridge Timber Deck Planks



This steel truss pedestrian bridge is generally in good condition, except that it has some badly cracked and deteriorating wood deck planks that need to be replaced. A detailed inspection by the City Maintenance, followed by replacement of damaged planks, is recommended.

Construction-only Cost Estimate: $7 K

Mill Valley Structure No. 87

Location: Fern Avenue at Catapala Avenue

Issue: Load-Bearing Concrete Beam Condition



This bridge is older and has multiple spalled concrete areas with rebar exposed at the edge of soffit, possibly due to the poor quality of the original concrete and workmanship, as well as abrasion by the flows. It needs repairs of the spalled sections and at the edge of soffit, where a load-bearing beam exists.

Construction-only Cost Estimate: $42 K

Mill Valley Structure No. 88

Location: Near No. 107 Walnut Avenue

Issues: Bridge Bean & Deck Concrete Spalls



The concrete bridge has a badly spalled section at edge of its soffit, where a load-bearing beam exists, due to poor quality original concrete. Chain-testing of the deck revealed an 18”x36” area of unsound concrete in a patched section as well. All concrete distress needs to be addressed.

Construction-only Cost Estimate: $56 K

Mill Valley Structure No. 89

Location: Locust Avenue at Sycamore Ave

Issue: Bridge & Barrier Concrete Condition



This concrete bridge has severely spalled sections with extensive rebar exposure throughout the soffit, probably caused by the poor quality of the original concrete and abrasion by the flows. One sidewalk and barrier are also severely cracked. All concrete issues need to be addressed.

Construction-only Cost Estimate: $70 K

Mill Valley Structure No. 103

Location: Near No. 731 E. Blithedale

Issue: Vehicular Impact to Guard Rail



The metal beam guardrail (MBGR) and a sign on one side of this concrete slab bridge have been struck by a vehicle, The MBGR is mangled and some of its posts have pulled out of foundation. The damaged MBGR needs to be replaced, but other repairs prescribed can be deferred until a later date.

Construction-only Cost Estimate: $14 K

Mill Valley Structure No. 109

Location: Bike Path at Miller Ave Near MV HS

Issue: Vehicular Colliding with Steel Bridge



The steel pedestrian bridge with wood deck planks was struck on its south side near midpoint by an errant driver and was bowed out sideways more than 4 inches. A steel rail post, wood railing boards, bearing elements at the abutments and some deck planks were also damaged, all requiring repairs in a shop.

Construction-only Cost Estimate: $112 K

2. CONDITION OF CULVERTS – There are nearly 3,000 linear feet, or over half of a mile, of culverts identified, conveying mostly creek or the watershed's tributary flows, and sometimes a mix of the local drainage and tributary flows. They range in size from 12 inches in diameter to seven feet, or larger. They may be round corrugated steel or precast concrete pipes; round HDPE pipes, or single- or multi-chambered cast-in-place (CIP) concrete box culverts. A number of them have proper inlet structures consisting of a headwall, short wingwalls and a debris rack.

The culverts in the system generally fare better than the bridges for various reasons. These include the fact that they are generally newer, smaller, more visible with reasonable access, and cheaper to repair or replace. They have been generally manufactured or precast in plants under controlled conditions, using better materials and skilled workers. When something has gone wrong in the past, the fix has been easier to implement by the City's maintenance crews. The culverts received an average heath score of 74 (from 100), having an average estimated remaining life expectancy of 36 years. None of the culverts made the critical, must-repair-now list.

The exception to the general better health of culverts is several single- or multi-chambered CIP concrete culverts. Like their bridge cousins, some of these concrete culverts suffer from the same material quality and poor workmanship in form of cracks, spalls, chips, rock pockets, abrasion and exposed rusty reinforcement, all of which should be addressed in the next 20 years or so. Also, a fairly common culvert issue is erosion at their outlets, which can be addressed with rock riprap. The estimated total cost of culvert repairs will be over $307,000.

3. OWNERSHIP AND JURISDICTION - MarinMap was used to determine the approximate City ROW. In places, the public/private property distinction may be nebulous due to the structures traversing in and out of ROW. In particular, jurisdictions for ravine crossings on the trails west of the city limits, where culverts convey the flows through, need to be determined. The following cases need to be clarified by the staff based on ROW records to determine the responsible entity for them:

List of Locations for ROW Verification		
Mill Valley Structure	**Location**	**Creek**
No. 13	Near # 20 Wainwright Place	Cascade Tributary
No. 25	Near # 34 Miller Avenue	Cascade
No. 26	At Miller Lane	Cascade
No. 55	~ ½ Mile from Old RR Grade Trailhead on Summit Ave.	Corte Madera Tributary

If any structure on this list is verified to be in private ROW, the owner should be notified.

4. CONCLUSIONS AND RECOMMENDATIONS - Work planned to repair, rehabilitate, or replace any part of the bridges and culverts system will be best if:

- The critical cases are addressed first
- Multiple bridge or culvert projects are combined for economy of scale
- The smaller projects costing less but with bigger bang for the buck are done first
- The bridge/culvert repair is combined with other area improvements
- Full hydrology and hydraulic analysis is performed for the entire watershed
- Obstacles to fish passage are removed
- A multi-year infrastructure maintenance and repair funding program is conceived

STRUCTURAL OBSERVATION REPORTS

MILL VALLEY STRUCTURE NO. 1

STRUCTURE NO. 1 - LOVELL AVENUE OVER CASCADE CREEK TRIBUTARY



Photo 1 - Street Level Looking East



Photo 2 – Culvert inlet and headwall with pipe barrier to stop drift

SUMMARY & RECOMMENDATIONS

The Bridge was visually inspected by Nader Tamannaie, PE, on March 31, 2020.

The field notes and photos are recorded in the subsequent pages of this section.

General Observations

This is a 24" ϕ corrugated metal pipe (CMP) to convey this small brook's flow under Lovell Avenue. The inlet headwall system and trash rack look recent, There is light rock riprap to dissipate the flow energy and prevent erosion. The CMP appears to be functioning well.

Structure's Qualitative Health & Serviceability Condition Score (0-100): < 85

Qualitative Estimate of Structure's Safe Remaining Life: < 40

Recommendations

No action is necessary at the moment. Keep an eye on the outlet's flow area for erosion.

Urgency of Maintenance Needs

None

Approximate Cost of Rehabilitation or Repairs

None

FIELD OBSERVATION NOTES

Observation Date and Time: 3-31-20, 10:50 a.m. Caltrans District: 4 County: Marin

Facility Carried: Lovell Ave. Feature Intersected: Tributary to Cascade Cr. Bridge ☐ Culvert ☒

Mill Valley Crossing No: 1 Caltrans Bridge No: _____ Year Built: _____

Total Width: ___ Total Length: 30'± No. of Spans (Bridge): _ No. of Chambers (Culvert): 1

Site Coordinates (Apple iPhone): 37° 54' 51" N & 122° 33' 47" W Weather: Overcast

Street Posted for Truck Weight Limit ☐ Speed Limit ☐ Nearest Postal Address: 665 Lovell Ave

SUPERSTRUCTURE AND TOPSIDE COMPONENTS	DESCRIPTION	CONDITION REMARKS
Superstructure Basics	• Structure Type & Materials: CMP • Alignment: Curved ☐ Tangent ☒ • Superstructure Depth: • Span Lengths: • Waterway Opening Height: • Skew at Abutments: • Curb-to-Curb Width: • Expansion Joints: n/a • Culvert ϕ or Dimensions: 24"	Corrugated metal pipe (CMP) with concrete headwalls and pipe post trash barrier at inlet
Railings, Sidewalks & Curbs	• Railing Type: Left ☐ Right ☐ • Railing Height: Left ☐ Right ☐ • Sidewalks on ____ side(s) • Width of Sidewalk: Left: Right: • Curb Height: • Median Barrier: Yes ☐ No ☒	
Deck Surface	• AC ☒ Concrete ☐ Wood ☐	
Span Hinges	• None ☒	
Restrainers	At: Abutments ☐ Bents ☐ None ☒	
Soffit Opening Locations	• None ☒	
Traffic Lanes on Structure	• No. of Traffic Lanes: 2 • Width of Median: • Width of Shoulder, Left: Right:	
Approaches	• Approach Slab at: BB ☐ EB ☐ None ☒ • No. of Traffic Lanes: 2 • Width of Median: None • Width of Shoulder: None Left: Right: • Width of Sidewalk: None Left: Right: • Railing Type: Left ☐ Right ☐ • Railing Height: Left: Right:	CMP crosses under a bend in the road

SUBSTRUCTURE AND UNDERSIDE COMPONENTS	DESCRIPTION	CONDITION REMARKS
Abutments Types & Wingwalls	• Abutment Types: • Integral wingwalls ☐ and/ or Headwalls: ☐	
Bent n/a	• Materials: • Number of bents: • Pier Wall Type ☐ Column Type ☐ • X-sectional Dimensions: • Skew at Bents:	n/a
Piling n/a	• Not Visible ☐ Pile Type: • Pile Extension:	n/a
Abutment and/or Bent Footings n/a	• Footings: Visible ☐ Not Visible ☐ • Invert slab: Yes ☐ No ☐	n/a
Embankment Condition and Erosion Control Measures	CMP outlet may need to be fortified with more rock riprap	
Road Under the Bridge n/a	• None ☐ • No. of Traffic Lanes: • Width of Median: • Width of Shoulder: Left: Right • Width of Sidewalk: Left: Right	n/a

MISCELLANEOUS FEATURES	DESCRIPTION	REMARKS
Evidence of Previous Work	☐ Seismic Retrofit ☐ Rehab & Repairs	Headwalls and pipe debris rack at inlet appear fairly recent
Visible Utilities	• Gas ☐ Water ☐ Sewer ☐ • Electrical ☐ Telecommunication ☐ • Other Utilities: None seen • Structure Lighting: • Manhole on Deck:	
Availability of Detours	Detour or stage construction	
Drainage Facilities on Structure	• None ☐ •	n/a
Drainage Facilities Under Structure	n/a	n/a
Existing Facilities at Structure	• Retaining Walls: None ☒ Integral ☐ Near Abuts ☐	
Visual Hydraulic Assessment – Fish Passage	Flow present ☒ Fish Spawning Route ☐	



Photo 3 – View of culvert's upstream



Photo 4 – CMP inlet



Photo 5 – View of culvert outlet at downstream end



Photo 6 – Downstream of CMP outlet

MILL VALLEY STRUCTURE NO. 2

STRUCTURE NO. 2 - LOVELL AVENUE OVER CASCADE CREEK HEADWATERS



Photo 1 - Street Level Looking East



Photo 2 – Street Level Looking West

SUMMARY & RECOMMENDATIONS

The Bridge was visually inspected by Nader Tamannaie, PE, on March 31, 2020.

The field notes and photos are recorded in the subsequent pages of this section.

General Observations

This is a 48" ϕ corrugated metal pipe (CMP) to convey this tributary's flow under Lovell Avenue. Pipe inlet is in private property and was not inspected. The CMP appears to be functioning well but its interior low flow path is rusting

Structure's Qualitative Health & Serviceability Condition Score (0-100): < 55

Qualitative Estimate of Structure's Safe Remaining Life: < 20 years

Recommendations

No action is necessary at the current time. Keep an eye on the CMP for corrosion.

Urgency of Maintenance Needs

None. Replace pipe in the next 20 years.

Approximate Cost of Rehabilitation or Repairs

None

FIELD OBSERVATION NOTES

Observation Date and Time: 3-31-20, 12:30 a.m. Caltrans District: 4 County: Marin

Facility Carried: Lovell Ave. Feature Intersected: Cascade Cr. Headwaters Bridge ☐ Culvert ☒

Mill Valley Crossing No: 2 Caltrans Bridge No: _____ Year Built: _____

Total Width: __ Total Length: 24'± No. of Spans (Bridge): _ No. of Chambers (Culvert): 1

Site Coordinates (Apple iPhone): 37° 54' 55" N & 122° 33' 55" W Weather: Overcast

Street Posted for Truck Weight Limit ☐ Speed Limit ☐ Nearest Postal Address: 750 Lovell Ave

SUPERSTRUCTURE AND TOPSIDE COMPONENTS	DESCRIPTION	CONDITION REMARKS
Superstructure Basics	• Structure Type & Materials: CMP • Alignment: Curved ☐ Tangent ☒ • Superstructure Depth: • Span Lengths: • Waterway Opening Height: • Skew at Abutments: • Curb-to-Curb Width: 16'± • Expansion Joints: n/a • Culvert ϕ or Dimensions: 48"	Corrugated metal pipe (CMP) under the road. The CMP is corroded at the outlet end. Pipe inlet is in private property and was not inspected.
Railings, Sidewalks & Curbs	• Railing Type: None Left ☐ Right ☐ • Railing Height: Left ☐ Right ☐ • Sidewalks on ____ side(s) • Width of Sidewalk: Left: Right: • Curb Height: • Median Barrier: Yes ☐ No ☒	
Deck Surface	• AC ☒ Concrete ☐ Wood ☐	n/a
Span Hinges n/a	• None ☐	n/a
Restrainers	At: Abutments ☐ Bents ☐ None ☐	n/a
Soffit Opening Locations n/a	• None ☒	
Traffic Lanes on Structure	• No. of Traffic Lanes: 2 narrow lanes • Width of Median: • Width of Shoulder, Left: Right:	
Approaches	• Approach Slab at: BB ☐ EB ☐ None ☒ • No. of Traffic Lanes: 2 narrow lanes • Width of Median: None • Width of Shoulder: None Left: Right • Width of Sidewalk: None Left: Right • Railing Type: Left ☐ Right ☐ • Railing Height: Left: Right:	CMP crosses under a bend in the road

SUBSTRUCTURE AND UNDERSIDE COMPONENTS	DESCRIPTION	CONDITION REMARKS
Abutments Types & Wingwalls	• Abutment Types: n/a • Integral wingwalls ☐ and/ or Headwalls: ☐	There is a large gabion wall neat the pipe outlet
Bent	• Materials: • Number of bents: • Pier Wall Type ☐ Column Type ☐ • X-sectional Dimensions: • Skew at Bents:	n/a
Piling	• Not Visible ☐ Pile Type: • Pile Extension:	n/a
Abutment and/or Bent Footings	• Footings: Visible ☐ Not Visible ☐ • Invert slab: Yes ☐ No ☐	n/a
Embankment Condition and Erosion Control Measures	The large gabion wall neat the pipe outlet maintains good embankment stability.	
Road Under the Bridge	• None ☐ • No. of Traffic Lanes: • Width of Median: • Width of Shoulder: Left: Right • Width of Sidewalk: Left: Right	n/a

MISCELLANEOUS FEATURES	DESCRIPTION	REMARKS
Evidence of Previous Work	☐ Seismic Retrofit ☐ Rehab & Repairs	Gabion wall appears relatively recent
Visible Utilities	• Gas [X] Water [X] Sewer [X] • Electrical [X] Telecommunication ☐ • Other Utilities: Power pole, fire hydrant nearby • Structure Lighting: • Manhole on Deck:	There is a vault and an electrical pole at the site
Availability of Detours	Detour or stage construction	
Drainage Facilities on Structure	• None ☐ •	n/a
Drainage Facilities Under Structure	There is a 12” CMP through the gabion wall.	
Existing Facilities at Structure	• Retaining Walls: Terraced gabion wall at outlet None ☐ Integral ☐ Near Abuts ☐	Gabion wall is fairly new, substantial and in good shape
Visual Hydraulic Assessment – Fish Passage	Flow present [X] Fish Spawning Route ☐	



Photo 3 – View of culvert's outlet. Rusted bottom is evident.

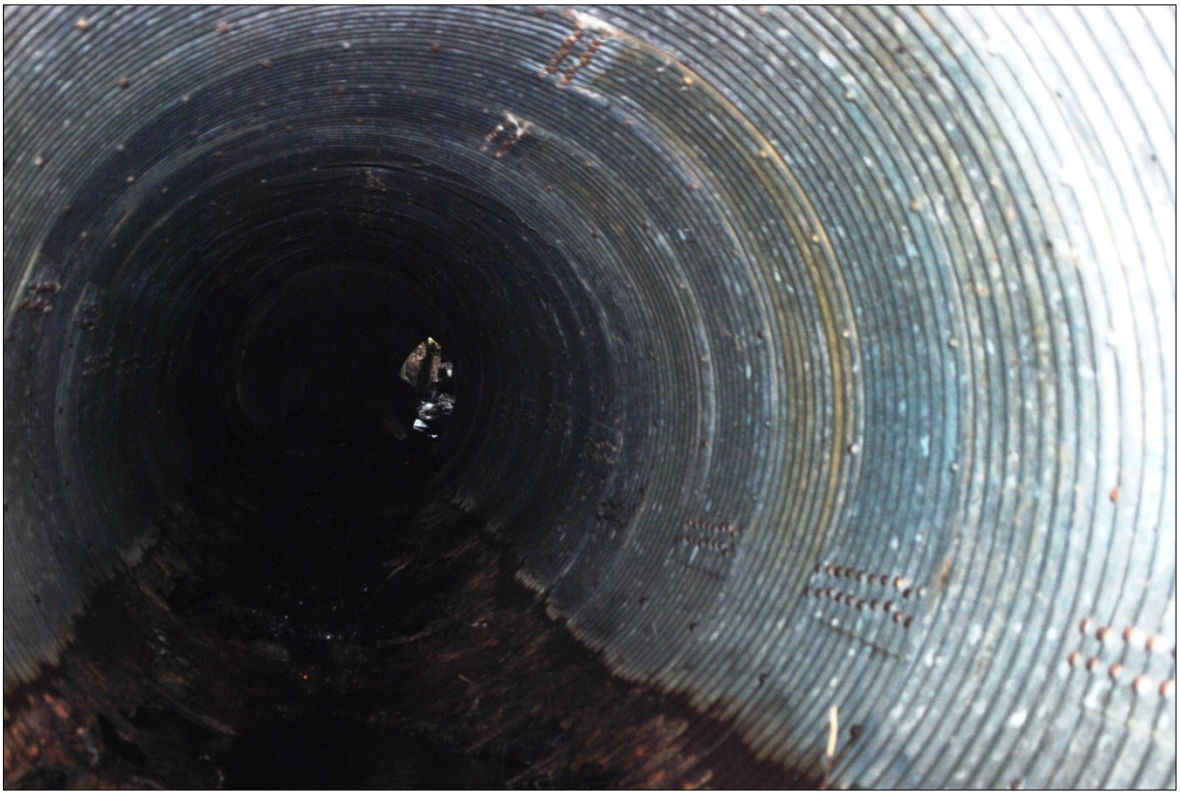

Photo 4 – View inside the CMP



Photo 5 – View of gabion wall and 12" CMP through the waqll at culvert's outlet



Photo 6 – View of CMP downstream of CMP outlet



Photo 7 – Downstream view from the pipe outlet



Photo 8 – Vault at the site

MILL VALLEY STRUCTURE NO. 3

STRUCTURE NO. 3 - LOVELL AVENUE OVER CASCADE CREEK TRIBUTARY



Photo 1 - Street Level Looking East



Photo 2 – Street Level Looking West

SUMMARY & RECOMMENDATIONS

The Bridge was visually inspected by Nader Tamannaie, PE, on March 31, 2020.

The field notes and photos are recorded in the subsequent pages of this section.

General Observations

This is a 24" ϕ reinforced concrete pipe (RCP) to convey this tributary's flow under Lovell Avenue. The RCP appears to be in good condition and functioning well.

Structure's Qualitative Health & Serviceability Condition Score (0-100): < 85

Qualitative Estimate of Structure's Safe Remaining Life: < 40 years

Recommendations

No action is necessary at the current time.

Urgency of Maintenance Needs

None.

Approximate Cost of Rehabilitation or Repairs

No repairs or rehabilitation is necessary at this point.

FIELD OBSERVATION NOTES

Observation Date and Time: 3-31-20, 12:45 p.m. Caltrans District: 4 County: Marin

Facility Carried: Lovell Ave. Feature Intersected: Cascade Cr. Tributary Bridge ☐ Culvert ☒

Mill Valley Crossing No: 3 Caltrans Bridge No: _____ Year Built: _____

Total Width: __ Total Length 20'± No. of Spans (Bridge): __ No. of Chambers (Culvert): 1

Site Coordinates (Apple iPhone): 37° 54' 52" N & 122° 33' 59" W Weather: Overcast

Street Posted for Truck Weight Limit ☐ Speed Limit ☐ Nearest Postal Address: 800 Lovell Ave

SUPERSTRUCTURE AND TOPSIDE COMPONENTS	DESCRIPTION	CONDITION REMARKS
Superstructure Basics	• Structure Type & Materials: RCP • Alignment: Curved ☐ Tangent ☒ • Superstructure Depth: • Span Lengths: • Waterway Opening Height: • Skew at Abutments: • Curb-to-Curb Width: 16'± • Expansion Joints: n/a • Culvert ϕ or Dimensions: 24"	Reinforced Concrete pipe (RCP) under the road.
Railings, Sidewalks & Curbs	• Railing Type: Wood Left ☐ Right ☒ • Railing Height: Left ☐ Right ☐ • Sidewalks on ____ side(s) • Width of Sidewalk: Left: Right: • Curb Height: • Median Barrier: Yes ☐ No ☒	Substandard railing
Deck Surface	• AC ☒ Concrete ☐ Wood ☐	
Span Hinges n/a	• None ☐	n/a
Restrainers	At: Abutments ☐ Bents ☐ None ☐	n/a
Soffit Opening Locations n/a	• None ☐	n/a
Traffic Lanes on Structure	• No. of Traffic Lanes: 1 • Width of Median: • Width of Shoulder, Left: Right:	
Approaches	• Approach Slab at: BB ☐ EB ☐ None ☒ • No. of Traffic Lanes: 1 • Width of Median: None • Width of Shoulder: None Left: Right 2'± • Width of Sidewalk: None Left: Left • Railing Type: Left ☐ Right ☐ • Railing Height: Left: Right:	CMP crosses under a bend in the road

SUBSTRUCTURE AND UNDERSIDE COMPONENTS	DESCRIPTION	CONDITION REMARKS
Abutments Types & Wingwalls	• Abutment Types: n/a • Integral wingwalls ☐ and/ or Headwalls: ☒	Stacked rock gravity headwall at the RCP outlet
Bent	• Materials: • Number of bents: • Pier Wall Type ☐ Column Type ☐ • X-sectional Dimensions: • Skew at Bents:	n/a
Piling	• Not Visible ☐ Pile Type: • Pile Extension:	n/a
Abutment and/or Bent Footings	• Footings: Visible ☐ Not Visible ☐ • Invert slab: Yes ☐ No ☐	n/a
Embankment Condition and Erosion Control Measures	The large gabion wall neat the pipe outlet maintains good embankment stability.	
Road Under the Bridge n/a	• None ☐ • No. of Traffic Lanes: • Width of Median: • Width of Shoulder: Left: Right • Width of Sidewalk: Left: Right	n/a

MISCELLANEOUS FEATURES	DESCRIPTION	REMARKS
Evidence of Previous Work	☐ Seismic Retrofit ☐ Rehab & Repairs	Gabion wall appears relatively recent
Visible Utilities	• Gas ☐ Water ☐ Sewer ☐ • Electrical ☒ Telecommunication ☐ • Other Utilities: Fire hydrant at the site • Structure Lighting: • Manhole on Deck:	Electrical pole and wires at the site
Availability of Detours	Detour or stage construction	
Drainage Facilities on Structure	• None ☒ •	
Drainage Facilities Under Structure	There is a 12” CMP through the gabion wall.	
Existing Facilities at Structure	• Retaining Walls: Rock headwall at outlet None ☐ Integral ☐ Near Abuts ☐	
Visual Hydraulic Assessment – Fish Passage	Flow present ☒ Fish Spawning Route ☐	



Photo 3 – View of culvert's outlet



Photo 4 - View of culvert's inlet



Photo 5 – View of railing on the vertical edge of the roadway at the turn



Photo 6 – Low wood retaining wall and drainage at the site



Photo 7 – Trailhead at the location



Photo 8– Fire hydrant at the location

MILL VALLEY STRUCTURE NO. 4

STRUCTURE NO. 4 - LOVELL AVENUE OVER TWO ADJACENT DRAINAGE PIPES



Photo 1 - Street Level Looking East. The angle of the drainage pipe is evident across AC



Photo 2 – Street Level Looking West

SUMMARY & RECOMMENDATIONS

The Bridge was visually inspected by Nader Tamannaie, PE, on March 31, 2020.

The field notes and photos are recorded in the subsequent pages of this section.

General Observations

This is the site of two 20" ϕ reinforced concrete pipes (RCPs), conveying the road and site drainage under Lovell Avenue. The RCPs appears to be in good condition and functioning well.

Structure's Qualitative Health & Serviceability Condition Score (0-100): < 90

Qualitative Estimate of Structure's Safe Remaining Life: < 40 years

Recommendations

In the future, place rock riprap on the slope just below each pipe outlet to protect against soil erosion.

Urgency of Maintenance Needs

None. The riprap can be done in the next 5-10 years

Approximate Cost of Rehabilitation or Repairs

No repairs or rehabilitation is necessary at this point.

FIELD OBSERVATION NOTES

Observation Date and Time: 3-31-20, 1:15 p.m. Caltrans District: 4 County: Marin

Facility Carried: Lovell Ave. Feature Intersected: Hillside & road drainage Bridge ☐ Culvert ☒

Mill Valley Crossing No: 4 Caltrans Bridge No: _____ Year Built: _____

Total Width: __ Total Length 30'± No. of Spans (Bridge): __ No. of Chambers (Culvert): 1 each

Site Coordinates (Apple iPhone): 37° 54' 52" N & 122° 33' 59" W Weather: Overcast

Street Posted for Truck Weight Limit ☐ Speed Limit ☐ Nearest Postal Address: 800 Lovell Ave

SUPERSTRUCTURE AND TOPSIDE COMPONENTS	DESCRIPTION	CONDITION REMARKS
Superstructure Basics	• Structure Type & Materials: 2 RCPs • Alignment: Curved ☐ Tangent ☒ • Superstructure Depth: • Span Lengths: • Waterway Opening Height: • Skew at Abutments: • Curb-to-Curb Width: 16'± • Expansion Joints: n/a • Culvert ϕ or Dimensions: each 20"	Two Reinforced Concrete pipes (RCP) under the road.
Railings, Sidewalks & Curbs	• Railing Type: Wood Left ☐ Right ☒ • Railing Height: Left ☐ Right ☐ • Sidewalks on ____ side(s) • Width of Sidewalk: Left: Right: • Curb Height: • Median Barrier: Yes ☐ No ☒	
Deck Surface	• AC ☒ Concrete ☐ Wood ☐	
Span Hinges n/a	• None ☐	n/a
Restrainers n/a	At: Abutments ☐ Bents ☐ None ☐	n/a
Soffit Opening Locations n/a	• None ☐	n/a
Traffic Lanes on Structure	• No. of Traffic Lanes: 1 • Width of Median: • Width of Shoulder, Left: Right:	
Approaches	• Approach Slab at: BB ☐ EB ☐ None ☒ • No. of Traffic Lanes: 1 • Width of Median: None • Width of Shoulder: None Left: Right 2'± • Width of Sidewalk: None Left: Right • Railing Type: Left ☐ Right ☐ • Railing Height: Left: Right:	CMP crosses under a bend in the road

SUBSTRUCTURE AND UNDERSIDE COMPONENTS	DESCRIPTION	CONDITION REMARKS
Abutments Types & Wingwalls	• Abutment Types: n/a • Integral wingwalls ☐ and/ or Headwalls: ☐	
Bent	• Materials: • Number of bents: • Pier Wall Type ☐ Column Type ☐ • X-sectional Dimensions: • Skew at Bents:	**n/a**
Piling	• Not Visible ☐ Pile Type: • Pile Extension:	**n/a**
Abutment and/or Bent Footings	• Footings: Visible ☐ Not Visible ☐ • Invert slab: Yes ☐ No ☐	n/a
Embankment Condition and Erosion Control Measures	The two pipes daylight past the edge of roadway out of the hill slope below. The drain pipe outlet on the hill above the road is protected with small rock riprap against erosion.	The outlet soils should be protected against erosion with small rock riprap.
Road Under the Bridge	• None ☐ • No. of Traffic Lanes: • Width of Median: • Width of Shoulder: Left: Right • Width of Sidewalk: Left: Right	n/a

MISCELLANEOUS FEATURES	DESCRIPTION	REMARKS
Evidence of Previous Work	☐ Seismic Retrofit ☐ Rehab & Repairs	Gabion wall appears relatively recent
Visible Utilities	• Gas ☐ Water ☐ Sewer ☐ • Electrical ☒ Telecommunication ☐ • Other Utilities: Fire hydrant at the site • Structure Lighting: • Manhole on Deck:	Electrical pole and wires at the site
Availability of Detours	Detouror stage construction	
Drainage Facilities on Structure	• None ☐ • Tow drain inlet (DI) and grates at culvert inlets	
Drainage Facilities Under Structure		
Existing Facilities at Structure	• Retaining Walls: Rock headwall at outlet None ☒ Integral ☐ Near Abuts ☐	
Visual Hydraulic Assessment – Fish Passage	Flow present ☐ Fish Spawning Route ☐	Dry pipes



Photo 3 – View of the two culverts' outlets



Photo 4 - View of one of the drainage inlet grates



Photo 5 – Hill drainage at the site and rock riprap protecting the hill from erosion



Photo 6 – Electrical pole at the site

MILL VALLEY STRUCTURE NO. 5

STRUCTURE NO. 5 - CASCADE DRIVE BRIDGE OVER CASCADE CREEK



Photo 1 - Street Level Looking North



Photo 2 - Street Level Looking North

SUMMARY & RECOMMENDATIONS

The Bridge was visually inspected by Nader Tamannaie, PE, on March 31, 2020.

The field notes and photos are recorded in the subsequent pages of this section.

General Observations

1. The bridge, a concrete slab with integral abutments and wingwalls, is in serviceable shape. It is an aged structure, estimated to be upwards of 80 years old and its foundations are unknown. The structure is a short bridge at high skew angle relative to the roadway, matching the flow direction. The structure has an invert slab for the entire flow area under it. Overall, the short bridge, its short wingwalls and concrete barrier railings appear to be stable in spite of their age.
2. The wood soldier pile and lagging retaining wall, supporting Cascade Drive along the edge of the creek, has badly dry-rotted soldier piles. Its failure would be very disruptive to traffic and environmentally impactful.
3. The pavement on the bridge deck and its approaches, as well as a timber retaining wall nearby will be under duress until the adjacent home construction is done. After this construction, the site will need to be restored, including the pavement and the retaining wall below.

Structure's Qualitative Health & Serviceability Condition Score (0-100): < 40

Qualitative Estimate of Structure's Safe Remaining Life: < 20 years

Recommendations

1. Replace the 55'-60' long timber soldier pile retaining wall adjacent to the bridge on the creek side edge of the road. This wall's soldier piles are in poor condition. As an alternative to another wall, consider a sidehill viaduct (small bridge) to replace the wall. This will reduce creek encroachment and implement an environmentally better alternative.
2. Ultimately, the structure must be replaced to eliminate the invert slab and make way for fish spawning and travel up the creek.

Urgency of Maintenance Needs

The work on the major repairs to the downstream timber retaining wall should be programmed as top priority. The bridge should be considered for replacement in the next 20 years.

Approximate Cost of Rehabilitation or Repairs

Wall replacement: $252,000

Bridge replacement: $572,000

FIELD OBSERVATION NOTES

Observation Date and Time: 3-31-20, 2:00 p.m. Caltrans District: 4 County: Marin

Facility Carried: Cascade Dr. Feature Intersected: Old Mill Creek Bridge [X] Culvert [ ]

Mill Valley Crossing No: 5 Caltrans Bridge No: _____ Year Built: _____

Total Width: 21' Total Length: 9' No. of Spans (Bridge): 1 No. of Chambers (Culvert): _____

Site Coordinates (Apple iPhone): 37° 54' 43" N & 122° 34' 06" W Weather: Overcast

Street Posted for Truck Weight Limit [ ] Speed Limit [ ] Nearest Postal Address 501 Cascade

SUPERSTRUCTURE AND TOPSIDE COMPONENTS	DESCRIPTION	CONDITION REMARKS
Superstructure Basics	• Structure Type & Materials: R/C Conc Slab • Alignment: Curved [ ] Tangent [X] • Superstructure Depth: 11"± • Span Lengths: 9' • Waterway Opening Height: 6'± • Skew at Abutments: 35°± • Curb-to-Curb Width: 16' • Expansion Joints: n/a • Culvert ϕ or Dimensions: n/a	Overall structure condition is reasonable for its age. However, the downstream wood soldier pile retaining wall is in very poor shape.
Railings, Sidewalks & Curbs	• Railing Type: Concrete Left [X] Right [X] • Railing Height: 2'-6" Left [X] Right [X] • Sidewalks on 0 side(s) • Width of Sidewalk: Left: Right: • Curb Height: 3" • Median Barrier: Yes [ ] No: [X]	
Deck Surface	• AC [X] Concrete [ ] Wood [ ]	
Span Hinges	• None [X]	
Restrainers	At: Abutments [ ] Bents [ ] None [X]	
Soffit Opening Locations	• None [X]	
Traffic Lanes on Bridge	• No. of Traffic Lanes: 1 • Width of Median: • Width of Shoulder, Left: Right:	
Approaches	• Approach Slab at: BB [ ] EB [ ] None [X] • No. of Traffic Lanes 2 narrow lanes • Width of Median: None • Width of Shoulder: None Left: Right • Width of Sidewalk: None Left: Left • Railing Type: Wood Left [X] Right [X] • Railing Height: Left: 2'± Right: 2'±	Home construction taking place on the hill adjacent to bridge. Congestion exists at the site. Possible overloads on above adjacent 55'± long retaining wall by construction equipment.

SUBSTRUCTURE AND UNDERSIDE COMPONENTS	DESCRIPTION	CONDITION REMARKS
Abutments Types & Wingwalls	• Abutment Types: Conc, integral with deck slab • Integral wingwalls [X] and/ or Headwalls: [ ]	
Bent	• Materials: • Number of bents: • Pier Wall Type [ ] Column Type [ ] • X-sectional Dimensions: • Skew at Bents:	n/a
Piling	• Not Visible [X] Pile Type: • Pile Extension:	
Abutment and/or Bent Footings	• Footings: Visible [ ] Not Visible [X] • Invert slab: Yes [X] No [ ]	Scour and erosion present just downstream of the invert slab.
Embankment Condition and Erosion Control Measures	Gravity wall at upstream left. Timber soldier pile wall downstream right. Large diameter soldier piles mostly rotted from top several feet down.	
Road Under the Bridge	• None [X] • No. of Traffic Lanes: • Width of Median: • Width of Shoulder: Left: Right • Width of Sidewalk: Left: Right	

MISCELLANEOUS FEATURES	DESCRIPTION	REMARKS
Evidence of Previous Work	[ ] Seismic Retrofit [ ] Rehab & Repairs	
Visible Utilities	• Gas [X] Water [X] Sewer [X] • Electrical [X] Telecommunication [ ] • Other Utilities: • Structure Lighting: • Manhole on Deck:	Several utility pipes crossing the creek under the bridge
Availability of Detours	Detour difficult	
Drainage Facilities on Structure	• None [X] •	
Drainage Facilities Under Structure	RCP daylighting thru the curved retaining wall near the bridge.	
Existing Facilities at Structure	• Retaining Walls: None [ ] Integral [ ] Near Abuts [X]	55'± long timber soldier pile retaining wall on the edge of the river/road in poor shape
Visual Hydraulic Assessment – Fish Passage	Flow present [X] Fish Spawning Route [ ]	



Photo 3 – Interior View looking downstream with several utility pipes and invert slab present



Photo 4 – View of upstream wingwalls at high skew to match the flow direction



Photo 5 – Barrier and gas pipe at upstream edge



Photo 6 – Barrier at upstream edge and roadway on bridge deck



Photo 6 – View of invert, upstream end



Photo 8 – Wood soldier pile & lagging wall, across the road home construction



Photo 9 – Badly rotted timber pile head, among several, retaining the adjacent roadway



Photo 10 – Construction adjacent to bridge. Pavement at the site is in poor condition

MILL VALLEY STRUCTURE NO. 6

STRUCTURE NO. 6 – CASCADE DRIVE OVER OLD MILL CREEK TRIBUTARY



Photo 1 - Street Level Looking east from Cascade Drive up the private trail



Photo 2 – Street Level Looking west downstream from inlet to the culvert

SUMMARY & RECOMMENDATIONS

The Bridge was visually inspected by Nader Tamannaie, PE, on March 31, 2020.

The field notes and photos are recorded in the subsequent pages of this section.

General Observations

This is the site of a 54" ϕ reinforced concrete pipe (RCP), bringing the flows from a book tributary into Old Mill Creek. The RCP and its inlet and outlet appear to be in good condition and functioning well.

Structure's Qualitative Health & Serviceability Condition Score (0-100): < 90

Qualitative Estimate of Structure's Safe Remaining Life: < 40 years

Recommendations

Remove the sedimentation and woody debris at the culvert inlet.

Urgency of Maintenance Needs

The cleaning of the sediments and woody debris accumulated at the inlet to the culvert should be done annually.

Approximate Cost of Rehabilitation or Repairs

Part of routine, annual maintenance activities and no extra budget allocation is necessary.

FIELD OBSERVATION NOTES

Observation Date and Time: 3-31-20, 2:30 p.m Caltrans District: 4 County: Marin

Facility Carried: Cascade Drive Feature Intersected: Old Mill Creek Tributary Bridge ☐ Culvert ☒

Mill Valley Crossing No: 6 Caltrans Bridge No: _____ Year Built: _____

Total Width: ____ Total Length 180'± No. of Spans (Bridge): ___ No. of Chambers (Culvert): 1

Site Coordinates (Apple iPhone): 37° 54' 41" N & 122° 34' 03" W Weather: Overcast

Street Posted for Truck Weight Limit ☐ Speed Limit ☐ Nearest Postal Address: 474 Cascade Dr.

SUPERSTRUCTURE AND TOPSIDE COMPONENTS	DESCRIPTION	CONDITION REMARKS
Superstructure Basics	• Structure Type & Materials: RCP • Alignment: Curved ☐ Tangent ☒ • Superstructure Depth: • Span Lengths: • Waterway Opening Height: • Skew at Abutments: • Curb-to-Curb Width: • Expansion Joints: n/a • Culvert ϕ or Dimensions: each 4'-6"	Bent pipe trash rack at inlet to the RCP. RCP runs down an unnamed unpaved cross street, across Cascade Dr and ends at Old Mill Creek
Railings, Sidewalks & Curbs n/a	• Railing Type: Wood Left ☐ Right ☒ • Railing Height: Left ☐ Right ☐ • Sidewalks on ____ side(s) • Width of Sidewalk: Left: Right: • Curb Height: • Median Barrier: Yes ☐ No ☐	
Deck Surface	• AC ☒ Concrete ☐ Wood ☐	AC on Cascade Dr. Cross street is unpaved
Span Hinges	• None ☐	n/a
Restrainers	At: Abutments ☐ Bents ☐ None ☐	n/a
Soffit Opening Locations n/a	• None ☐	n/a
Traffic Lanes on Structure	• No. of Traffic Lanes: 1 • Width of Median: • Width of Shoulder, Left: Right:	
Approaches	• Approach Slab at: BB ☐ EB ☐ None ☒ • No. of Traffic Lanes: 1 • Width of Median: None • Width of Shoulder: None Left: Right 2'± • Width of Sidewalk: None Left: Right • Railing Type: Left ☐ Right ☐ • Railing Height: Left: Right:	

SUBSTRUCTURE AND UNDERSIDE COMPONENTS	DESCRIPTION	CONDITION REMARKS
Abutments Types & Wingwalls	• Abutment Types: n/a • Integral wingwalls [X] and/ or Headwalls [X]	Wingwalls, headwall, invert and trash rack at inlet to culvert
Bent	• Materials: • Number of bents: • Pier Wall Type [ ] Column Type [ ] • X-sectional Dimensions: • Skew at Bents:	n/a
Piling n/a	• Not Visible [ ] Pile Type: • Pile Extension:	n/a
Abutment and/or Bent Footings n/a	• Footings: Visible [ ] Not Visible [ ] • Invert slab: Yes [ ] No [ ]	n/a
Embankment Condition and Erosion Control Measures	Embankments at both inlet and outlet are low and stable. However, sediments have accumulated at the inlet, reducing culvert capacity.	
Road Under the Bridge n/a	• None [ ] • No. of Traffic Lanes: • Width of Median: • Width of Shoulder: Left: Right • Width of Sidewalk: Left: Right	n/a

MISCELLANEOUS FEATURES	DESCRIPTION	REMARKS
Evidence of Previous Work	[ ] Seismic Retrofit [ ] Rehab & Repairs	
Visible Utilities	• Gas [ ] Water [ ] Sewer [ ] • Electrical [X] Telecommunication [ ] • Other Utilities: Fire hydrant at the site • Structure Lighting: • Manhole on Deck:	
Availability of Detours	Detour possible	
Drainage Facilities on Structure	• None [ ] • Tow drain inlet (DI) and grates at culvert inlets	
Drainage Facilities Under Structure	There is a 12” CMP through the gabion wall.	
Existing Facilities at Structure	• Retaining Walls: Rock headwall at outlet None [X] Integral [ ] Near Abuts [ ]	
Visual Hydraulic Assessment – Fish Passage	Flow present [X] Fish Spawning Route [ ]	



Photo 3 – Culvert outlet at Old Mill Creek flowing alongside of Cascade Drive



Photo 4 - View of upstream from inlet to the culvert



Photo 5 – View downstream at culvert inlet and trash rack



Photo 6 – Details of trash rack at inlet

MILL VALLEY STRUCTURE NO. 7

STRUCTURE NO. 7 - CASCADE DRIVE BRIDGE OVER OLD MILL CREEK



Photo 1 - Street Level Looking Soth



Photo 2 - Street Level Looking Northt

SUMMARY & RECOMMENDATIONS

The Bridge was visually inspected by Nader Tamannaie, PE, on March 31, 2020.

The field notes and photos are recorded in the subsequent pages of this section.

General Observations

1. The bridge, a short concrete slab bridge with integral abutments and wingwalls, is in serviceable condition. It is an aged structure, estimated to be upwards of 80 years old. Its foundations are unknown. The structure has an invert slab for the entire flow area under it.
2. There is minor scour at the end of the invert slab.

Structure's Qualitative Health & Serviceability Condition Score (0-100): < 50

Qualitative Estimate of Structure's Safe Remaining Life: < 30 years

Recommendations

1. Repair the barrier and edge of slab spalls with epoxy grout.
2. Place rock riprap where the downstream wingwall is broken to support the embankment and prevent further scour
3. Ultimately, the structure must be replaced to eliminate the invert slab and make way for fish spawning and travel up the creek.

Urgency of Maintenance Needs

The work on the wingwall is important and should be done in the next five years.

Approximate Cost of Rehabilitation or Repairs : $35,000

FIELD OBSERVATION NOTES

Observation Date and Time: 3-31-20, 3:15 p.m. Caltrans District: 4 County: Marin

Facility Carried: Cascade Dr. Feature Intersected: Old Mill Creek Bridge [X] Culvert [ ]

Mill Valley Crossing No: 7 Caltrans Bridge No: _____ Year Built: _____

Total Width: 23'± Total Length: 14'-6" ±' No. of Spans (Bridge): 1 No. of Chambers (Culvert): ____

Site Coordinates (Apple iPhone): 37° 54' 43" N & 122° 33' 52" W Weather: semi-cloudy

Street Posted for Truck Weight Limit [ ] Speed Limit [ ] Nearest Postal Address 422 Cascade

SUPERSTRUCTURE AND TOPSIDE COMPONENTS	DESCRIPTION	CONDITION REMARKS
Superstructure Basics	• Structure Type & Materials: R/C Slab • Alignment: Curved [ ] Tangent [X] • Superstructure Depth: 12"± • Span Lengths: 13'± • Waterway Opening Height: 8.5'± • Skew at Abutments: 45°± • Curb-to-Curb Width: 20' • Expansion Joints: n/a • Culvert ϕ or Dimensions: n/a	R/C: Reinforced Concrete
Railings, Sidewalks & Curbs	• Railing Type: Conc Left [X] Right [X] • Railing Height: 2'-6" Left [X] Right [X] • Sidewalks on 0 side(s) • Width of Sidewalk: Left: Right: • Curb Height: 4" • Median Barrier: Yes [ ] No: [X]	
Deck Surface	• AC [X] Concrete [ ] Wood [ ]	
Span Hinges	• None [X]	
Restrainers	At: Abutments [ ] Bents [ ] None [X]	
Soffit Opening Locations	• None [X]	
Traffic Lanes on Bridge	• No. of Traffic Lanes: 1 • Width of Median: • Width of Shoulder, Left: Right:	
Approaches	• Approach Slab at: BB [ ] EB [ ] None [X] • No. of Traffic Lanes 1 • Width of Median: None • Width of Shoulder: None Left: Right • Width of Sidewalk: None Left: Right • Railing Type: Wood Left [X] Right [X] • Railing Height: Left: 2'± Right: 2'±	

SUBSTRUCTURE AND UNDERSIDE COMPONENTS	DESCRIPTION	CONDITION REMARKS
Abutments Types & Wingwalls	• Abutment Types: Conc, integral with deck slab • Integral wingwalls [X] and/ or Headwalls: [ ]	
Bent	• Materials: • Number of bents: • Pier Wall Type [ ] Column Type [ ] • X-sectional Dimensions: • Skew at Bents:	n/a
Piling	• Not Visible [X] Pile Type: • Pile Extension:	
Abutment and/or Bent Footings	• Footings: Visible [ ] Not Visible [X] • Invert slab: Yes [X] No [ ]	Scour and erosion present just downstream of the invert slab.
Embankment Condition and Erosion Control Measures	The downstream left wingwall is cracked and crumbled, the earth retained has been undermined and scoured.	
Road Under the Bridge	• None [X] • No. of Traffic Lanes: • Width of Median: • Width of Shoulder: Left Right • Width of Sidewalk: Left Right	

MISCELLANEOUS FEATURES	DESCRIPTION	REMARKS
Evidence of Previous Work	[ ] Seismic Retrofit [ ] Rehab & Repairs	
Visible Utilities	• Gas [ ] Water [ ] Sewer [ ] • Electrical [X] Telecommunication [ ] • Other Utilities: • Structure Lighting: • Manhole on Deck:	
Availability of Detours	Detour not possible	
Drainage Facilities on Structure	• None [X] •	
Drainage Facilities Under Structure	None	
Existing Facilities at Structure	• Retaining Walls: None [ ] Integra [X] Near Abuts [X]	Retaining wall downstream right
Visual Hydraulic Assessment – Fish Passage	Flow present [X] Fish Spawning Route [ ]	



Photo 3 – Steep hill above the creek & bridge. High skew of flow relative to road also surmised.



Photo 4 – View of bridge rail on the opposite side of the canyon in which the road is



Photo 5 – Edge of bridge at upstream end



Photo 6 – View of upstream edge showing the invert and small concrete spall at the edge



Photo 7 – Scour at the end of downstream left wingwall



Photo 8 – Scour at the end of downstream right wingwall



Photo 9 – Damage to barrier railing. Lack of reinforcement is evident

MILL VALLEY STRUCTURE NO. 8

STRUCTURE NO. 8 - CASCADE DRIVE BRIDGE AT CONFLUENCE OF OLD MILL AND CASCADE CREEKS



Photo 1 - Street Level LookingSoutht



Photo 2 - Street Level Looking West

SUMMARY & RECOMMENDATIONS

The Bridge was visually inspected by Nader Tamannaie, PE, on March 31, 2020.

The field notes and photos are recorded in the subsequent pages of this section.

General Observations

1. The bridge, a reinforced concrete slab with integral abutments and wingwalls, is in serviceable condition. It is an aged structure, estimated to be upwards of 80 years old. Its foundations are unknown. The structure has a short span but is very wide, located at a bend in the road at the confluence of Old Mill and Cascade Creeks. The structure has an invert slab for the entire flow area under it.
2. There is no barrier railing at either edge of the structure.
3. There is a small scour pool at the end of the invert slab.

Structure's Qualitative Health & Serviceability Condition Score (0-100): < 60

Qualitative Estimate of Structure's Safe Remaining Life: < 30 years

Recommendations

1. Construct safety railings at both edges of the structure
2. Place rock riprap at the downstream end of the invert slab to prevent its undermining.
3. Ultimately, the structure must be replaced to eliminate the invert slab and make way for fish spawning and travel up the two creeks.

Urgency of Maintenance Needs

The work of constructing barrier railings is important and is priority.

Approximate Cost of Rehabilitation or Repairs: $42,000

FIELD OBSERVATION NOTES

Observation Date and Time: 3-31-20, 4:10 p.m. Caltrans District: 4 County: Marin

Facility Carried: Cascade Dr. Feature Intersected: Old Mill & Cascade Creeks Bridge [X] Culvert [ ]

Mill Valley Crossing No: 8 Caltrans Bridge No: _____ Year Built: _____

Total Width: 52'± Total Length: 6' ± No. of Spans (Bridge): 1 No. of Chambers (Culvert):____

Site Coordinates (Apple iPhone): 37° 54' 42" N & 122° 33' 50" W Weather: Part cloudy

Street Posted for Truck Weight Limit [ ] Speed Limit [ ] Nearest Postal Address @Cascade Falls Trail

SUPERSTRUCTURE AND TOPSIDE COMPONENTS	DESCRIPTION	CONDITION REMARKS
Superstructure Basics	• Structure Type & Materials: R/C Slab • Alignment: Curved [ ] Tangent [X] • Superstructure Depth: 11"± • Span Lengths: 6'± • Waterway Opening Height: 6'± • Skew at Abutments: 45°± • Curb-to-Curb Width: 50' • Expansion Joints: n/a • Culvert ϕ or Dimensions: n/a	
Railings, Sidewalks & Curbs	• Railing Type: None Left [X] Right [X] • Railing Height: n/a Left [X] Right [X] • Sidewalks on Right side(s) looking north • Width of Sidewalk: Left: 0' Right: 6' • Curb Height: 4" • Median Barrier: Yes [ ] No: [X]	No fall protection railing exists at either edge of the structure
Deck Surface	• AC [X] Concrete [ ] Wood [ ]	
Span Hinges	• None [X]	
Restrainers	At: Abutments [ ] Bents [ ] None [X]	
Soffit Opening Locations	• None [X]	
Traffic Lanes on Bridge	• No. of Traffic Lanes: 2 • Width of Median: • Width of Shoulder, Left: 2' Right: 0'	
Approaches	• Approach Slab at: BB [ ] EB [ ] None [X] • No. of Traffic Lanes 2 • Width of Median: None • Width of Shoulder: None Left: Right • Width of Sidewalk: None Left: Right • Railing Type: Wood Left [X] Right [X] • Railing Height: Left: Right	

SUBSTRUCTURE AND UNDERSIDE COMPONENTS	DESCRIPTION	CONDITION REMARKS
Abutments Types & Wingwalls	• Abutment Types: Conc, integral with deck slab • Integral wingwalls [X] and/ or Headwalls: [ ]	
Bent	• Materials: • Number of bents: • Pier Wall Type [ ] Column Type [ ] • X-sectional Dimensions: • Skew at Bents:	n/a
Piling	• Not Visible [X] Pile Type: • Pile Extension:	
Abutment and/or Bent Footings	• Footings: Visible [ ] Not Visible [X] • Invert slab: Yes [X] No [ ]	Scour pool present just downstream of the invert slab.
Embankment Condition and Erosion Control Measures	End of invert slab is undermined by scour.	
Road Under the Bridge	• None [X] • No. of Traffic Lanes: • Width of Median: • Width of Shoulder: Left Right • Width of Sidewalk: Left Right	

MISCELLANEOUS FEATURES	DESCRIPTION	REMARKS
Evidence of Previous Work	[ ] Seismic Retrofit [ ] Rehab & Repairs	
Visible Utilities	• Gas [ ] Water [ ] Sewer [ ] • Electrical [X] Telecommunication [ ] • Other Utilities: • Structure Lighting: • Manhole on Deck:	
Availability of Detours	Detour not possible	
Drainage Facilities on Structure	• None [X] •	
Drainage Facilities Under Structure	None	
Existing Facilities at Structure	• Retaining Walls: None [X] Integral [ ] Near Abuts [ ]	
Visual Hydraulic Assessment – Fish Passage	Flow present [X] Fish Spawning Route [ ]	



Photo 3 – Looking up the trail adjacent to Old Mill Creek and the creek itself



Photo 4 - Trail sign



Photo 5 – Upstream Edge of bridge, with deck edge beam in foreground & no fall protection



Photo 6 – Edge of bridge at downstream end where Old Mill and Cascade Creeks join

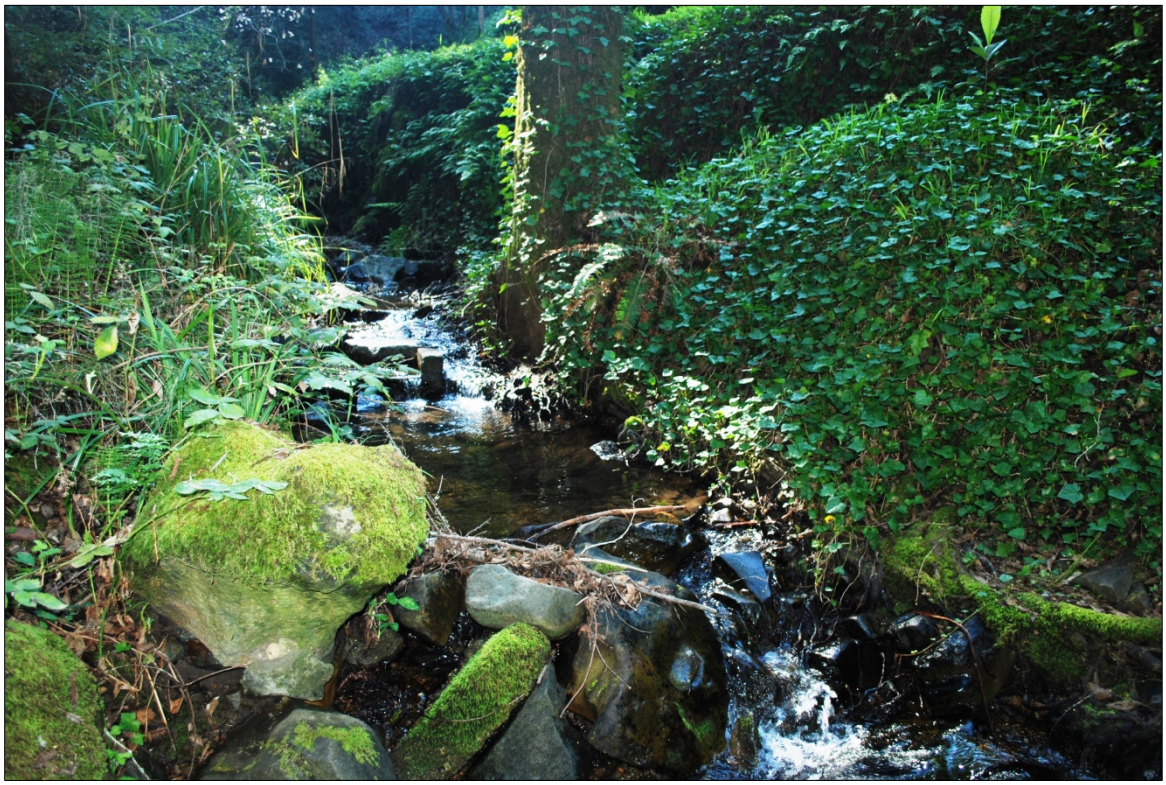

Photo 7 – View upstream at Old Mill Creek



Photo 8 – View downstream at Cascade Creek



Photo 9 – View through the structure



Photo 10 – View of structure edge. No fall protection exists

MILL VALLEY STRUCTURE NO. 9

STRUCTURE NO. 9 - CASCADE DRIVE BRIDGE OVER CASCADE CREEK



Photo 1 - Street Level Looking south



Photo 2 - Street Level Looking north

SUMMARY & RECOMMENDATIONS

The Bridge was visually inspected by Nader Tamannaie, PE, on March 31, 2020.

The field notes and photos are recorded in the subsequent pages of this section.

General Observations

1. The bridge, a concrete slab with integral abutments and wingwalls, is in serviceable condition. It is an aged structure, estimated to be upwards of 80 years old. Its foundations are unknown. The structure has a short span and has an invert slab for the entire flow area under it.
2. There is a small scour pool at the end of the invert slab.

Structure's Qualitative Health & Serviceability Condition Score (0-100): < 60

Qualitative Estimate of Structure's Safe Remaining Life: <30 years

Recommendations

1. Place rock riprap at the downstream end of the invert slab to prevent its undermining.
2. Ultimately, the structure should be replaced to eliminate the invert slab and make way for fish spawning and travel up and down the creek.

Urgency of Maintenance Needs

Recommendation No. 1 above is not critical and can be done in the next 5 years.

Approximate Cost of Rehabilitation or Repairs: $14,000

FIELD OBSERVATION NOTES

Observation Date and Time: 3-31-20, 4:45 p.m. Caltrans District: 4 County: Marin

Facility Carried: Cascade Dr. Feature Intersected: Cascade Creek Bridge [X] Culvert [ ]

Mill Valley Crossing No: 9 Caltrans Bridge No: _____ Year Built: _____

Total Width: 32'± Total Length: 12'± No. of Spans (Bridge): 1 No. of Chambers (Culvert): _____

Site Coordinates (Apple iPhone): 37° 54' 38" N & 122° 33' 42" W Weather: Clear

Street Posted for Truck Weight Limit [ ] Speed Limit [ ] Nearest Postal Address 131 Cascade

SUPERSTRUCTURE AND TOPSIDE COMPONENTS	DESCRIPTION	CONDITION REMARKS
Superstructure Basics	• Structure Type & Materials: R/C Slab • Alignment: Curved [ ] Tangent [X] • Superstructure Depth: 12"± • Span Lengths: 6'± • Waterway Opening Height: 7'± • Skew at Abutments: 15°± • Curb-to-Curb Width: 30' • Expansion Joints: n/a • Culvert ϕ or Dimensions: n/a	
Railings, Sidewalks & Curbs	• Railing Type: Concrete Left [X] Right [X] • Railing Height: 2'-2" Left [X] Right [X] • Sidewalk(s) on 2 side(s) • Width of Sidewalk: Left: 4'-8" Right: 4'-8" • Curb Height: 2" • Median Barrier: Yes [ ] No: [X]	
Deck Surface	• AC [X] Concrete [ ] Wood [ ]	
Span Hinges	• None [X]	
Restrainers	At: Abutments [ ] Bents [ ] None [X]	
Soffit Opening Locations	• None [X]	
Traffic Lanes on Bridge	• No. of Traffic Lanes: 2 • Width of Median: • Width of Shoulder, Left: 2' Right: 0'	
Approaches	• Approach Slab at: BB [ ] EB [ ] None [X] • No. of Traffic Lanes: 2 • Width of Median: None • Width of Shoulder: None Left: Right • Width of Sidewalk: None Left: Right • Railing Type: n/a Left [ ] Right [ ] • Railing Height: n/a Left: Right	

SUBSTRUCTURE AND UNDERSIDE COMPONENTS	DESCRIPTION	CONDITION REMARKS
Abutments Types & Wingwalls	• Abutment Types: Conc, integral with deck slab • Integral wingwalls [X] and/ or Headwalls: [ ]	
Bent	• Materials: • Number of bents: • Pier Wall Type [ ] Column Type [ ] • X-sectional Dimensions: • Skew at Bents:	n/a
Piling	• Not Visible [X] Pile Type: • Pile Extension:	
Abutment and/or Bent Footings	• Footings: Visible [ ] Not Visible [X] • Invert slab: Yes [X] No [ ]	
Embankment Condition and Erosion Control Measures	Scour pool present just downstream of the invert slab.	
Road Under the Bridge	• None [ ] • No. of Traffic Lanes: • Width of Median: • Width of Shoulder: Left Right • Width of Sidewalk: Left Right	n/a

MISCELLANEOUS FEATURES	DESCRIPTION	REMARKS
Evidence of Previous Work	[ ] Seismic Retrofit [ ] Rehab & Repairs	
Visible Utilities	• Gas [X] Water [X] Sewer [X] • Electrical [X] Telecommunication [ ] • Other Utilities: • Structure Lighting: • Manhole on Deck:	Utility pipe (possible water) crosses the creek under the soffit in the flow area
Availability of Detours	Detour not possible	
Drainage Facilities on Structure	• None [X] •	
Drainage Facilities Under Structure	None	
Existing Facilities at Structure	• Retaining Walls: None [X] Integral [ ] Near Abuts [ ]	
Visual Hydraulic Assessment – Fish Passage	Flow present [X] Fish Spawning Route [ ]	



Photo 3 – Looking at upstream edge of the bridge



Photo 4 - Looking upstream through the bridge



Photo 5 – Downstream view from the bridge



Photo 6 – Upstream view from the bridge

MILL VALLEY STRUCTURE NO. 10

STRUCTURE NO. 10 - CASCADE DRIVE BRIDGE OVER CASCADE CREEK



Photo 1 - Street Level Looking South



Photo 2 - Street Level Looking North

SUMMARY & RECOMMENDATIONS

The Bridge was visually inspected by Nader Tamannaie, PE, on March 31, 2020.

The field notes and photos are recorded in the subsequent pages of this section.

General Observations

The bridge, a short-span, earth-filled concrete arch with integral abutments and short wingwalls, is in serviceable condition. It is an aged structure, estimated to be upwards of 80 years old. Its foundations are unknown. The structure has a natural soil creek bed under it.

Structure's Qualitative Health & Serviceability Condition Score (0-100): < 50

Qualitative Estimate of Structure's Safe Remaining Life: < 25 years

Recommendations

1, Replace the hight sacked concrete wall on upstream right side.

2. The opening in the bridge railings are too large for safety. A Study galvanized wire mesh should be stretched across and tied to the entire railing.

Urgency of Maintenance Needs

Recommendation No. 1 above is not critical and can be done in the next 5-10 years.

Recommendation No. 2 should be implemented when the barrier is repaired or replaced.

Approximate Cost of Rehabilitation or Repairs : $75,000

FIELD OBSERVATION NOTES

Observation Date and Time: 3-31-20, 4:45 p.m. Caltrans District: 4 County: Marin

Facility Carried: Cascade Dr. Feature Intersected: Cascade Creek Bridge [X] Culvert [ ]

Mill Valley Crossing No: 10 Caltrans Bridge No: _____ Year Built: _____

Total Width: 18'± Total Length: 12'± No. of Spans (Bridge): 1 No. of Chambers (Culvert): _____

Site Coordinates (Apple iPhone): 37° 54' 36" N & 122° 33' 40" W Weather: Clear

Street Posted for Truck Weight Limit [ ] Speed Limit [ ] Nearest Postal Address # 277 Cascade

SUPERSTRUCTURE AND TOPSIDE COMPONENTS	DESCRIPTION	CONDITION REMARKS
Superstructure Basics	• Structure Type & Materials: R/C Filled Arch • Alignment: Curved [ ] Tangent [X] • Superstructure Depth: 3' minimum & varies • Span Lengths:10'± • Waterway Opening Height: 4'± • Skew at Abutments: 10°± • Curb-to-Curb Width: 16' • Expansion Joints: n/a • Culvert ϕ or Dimensions: n/a	
Railings, Sidewalks & Curbs	• Railing Type: Steel piping Left [X] Right [X] • Railing Height: 2'-4" Left [X] Right [X] • Sidewalk(s) on 2 side(s) • Width of Sidewalk: Left: none Right: none • Curb Height: 3" • Median Barrier: Yes [ ] No: [X]	
Deck Surface	• AC [X] Concrete [ ] Wood [ ]	
Span Hinges	• None [X]	
Restrainers	At: Abutments [ ] Bents [ ] None [X]	
Soffit Opening Locations	• None [X]	
Traffic Lanes on Bridge	• No. of Traffic Lanes: 1 • Width of Median: • Width of Shoulder, Left: 2' Right: 0'	
Approaches	• Approach Slab at: BB [ ] EB [ ] None [X] • No. of Traffic Lanes:1 • Width of Median: None • Width of Shoulder: None Left: 2' Right: 2' • Width of Sidewalk: None Left: Right: • Railing Type: n/a Left [ ] Right [ ] • Railing Height: n/a Left: Right	

SUBSTRUCTURE AND UNDERSIDE COMPONENTS	DESCRIPTION	CONDITION REMARKS
Abutments Types & Wingwalls	• Abutment Types: Conc, integral with superstructure • Integral wingwalls [X] and/ or Headwalls: [X]	Sacked concrete walls on the upstream side
Bent	• Materials: • Number of bents: • Pier Wall Type [ ] Column Type [ ] • X-sectional Dimensions: • Skew at Bents:	n/a
Piling	• Not Visible [X] Pile Type: • Pile Extension:	
Abutment and/or Bent Footings	• Footings: Visible [ ] Not Visible [X] • Invert slab: Yes [X] No [ ]	
Embankment Condition and Erosion Control Measures	Embankments are stable	
Road Under the Bridge	• None [ ] • No. of Traffic Lanes: • Width of Median: • Width of Shoulder: Left Right • Width of Sidewalk: Left Right	n/a

MISCELLANEOUS FEATURES	DESCRIPTION	REMARKS
Evidence of Previous Work	[ ] Seismic Retrofit [ ] Rehab & Repairs	
Visible Utilities	• Gas [ ] Water [ ] Sewer [ ] • Electrical [X] Telecommunication [ ] • Other Utilities: • Structure Lighting: • Manhole on Deck:	
Availability of Detours	Detour not possible	
Drainage Facilities on Structure	• None [X] •	
Drainage Facilities Under Structure	None	
Existing Facilities at Structure	• Retaining Walls: None [ ] Integral [X] Near Abuts [ ]	
Visual Hydraulic Assessment – Fish Passage	Flow present [X] Fish Spawning Route [ ]	



Photo 3 – Looking from upstream side of the bridge



Photo 4 - Looking from downstream side of the bridge



Photo 5 – High sacked concrete used to retain the upstream right embankment



Photo 6 – Lower sacked concrete used to retain the upstream left embankment



Photo 7 – View of downstream

MILL VALLEY STRUCTURE NO. 11

STRUCTURE NO. 11 - CASCADE DRIVE BRIDGE OVER CASCADE CREEK



Photo 1 - Street Level Looking South



Photo 2 - Street Level Looking North. Poor pavement on the bridge and its approaches

SUMMARY & RECOMMENDATIONS

The Bridge was visually inspected by Nader Tamannaie, PE, on March 31, 2020.

The field notes and photos are recorded in the subsequent pages of this section.

General Observations

The bridge, a reinforced concrete slab with integral abutments and short wingwalls, is in serviceable condition. It is an aged structure, estimated to be upwards of 80 years old. Its foundations are unknown. The structure has an invert slab for the entire flow area under it.

Structure's Qualitative Health & Serviceability Condition Score (0-100): < 50

Qualitative Estimate of Structure's Safe Remaining Life: < 25 years

Recommendations

It is recommended that the AC on the bridge deck and its approaches be coldplaned, removed and the approaches repaved. If cracks are then revealed on the deck, it should be sealed with methacrylate and/or polyester concrete.

Urgency of Maintenance Needs

The above recommendation is not critical and can be done in the next 5 years.

Approximate Cost of Rehabilitation or Repairs: $42,000

FIELD OBSERVATION NOTES

Observation Date and Time: 3-31-20, 6:00 p.m. Caltrans District: 4 County: Marin

Facility Carried: Cascade Dr. Feature Intersected: Cascade Creek Bridge [X] Culvert [ ]

Mill Valley Crossing No: 11 Caltrans Bridge No: _____ Year Built: _____

Total Width: 32'± Total Length: 13'± No. of Spans (Bridge): 1 No. of Chambers (Culvert): _____

Site Coordinates (Apple iPhone): 37° 54' 33" N & 122° 33' 38" W Weather: Clear

Street Posted for Truck Weight Limit [ ] Speed Limit [ ] Nearest Postal Address 260 Cascade

SUPERSTRUCTURE AND TOPSIDE COMPONENTS	DESCRIPTION	CONDITION REMARKS
Superstructure Basics	• Structure Type & Materials: R/C slab • Alignment: Curved [ ] Tangent [X] • Superstructure Depth: 11" • Span Lengths:11'± • Waterway Opening Height: 8'± • Skew at Abutments: 10°± • Curb-to-Curb Width: 22'-6"±' • Expansion Joints: n/a • Culvert ϕ or Dimensions: n/a	
Railings, Sidewalks & Curbs	• Railing Type: Concrete Left [X] Right [X] • Railing Height: 2'-2" Left [X] Right [X] • Sidewalk(s) on 2 side(s) • Width of Sidewalk: Left: 4'-8" Right: 4'-8" • Curb Height: 3" • Median Barrier: Yes [ ] No: [X]	
Deck Surface	• AC [X] Concrete [ ] Wood [ ]	
Span Hinges	• None [X]	
Restrainers	At: Abutments [ ] Bents [ ] None [X]	
Soffit Opening Locations	• None [X]	
Traffic Lanes on Bridge	• No. of Traffic Lanes: 2 • Width of Median: None • Width of Shoulder, Left: None Right: None	
Approaches	• Approach Slab at: BB [ ] EB [ ] None [X] • No. of Traffic Lanes: 2 • Width of Median: None • Width of Shoulder: None Left: 2' Right: 2' • Width of Sidewalk: None Left: Right: • Railing Type: n/a Left [ ] Right [ ] • Railing Height: n/a Left: Right	

SUBSTRUCTURE AND UNDERSIDE COMPONENTS	DESCRIPTION	CONDITION REMARKS
Abutments Types & Wingwalls	• Abutment Types: Conc, integral with deck • Integral wingwalls [X] and/ or Headwalls: [X]	Abutment concrete abraded by swift flows
Bent	• Materials: • Number of bents: • Pier Wall Type [ ] Column Type [ ] • X-sectional Dimensions: • Skew at Bents:	n/a
Piling	• Not Visible [X] Pile Type: • Pile Extension:	
Abutment and/or Bent Footings	• Footings: Visible [ ] Not Visible [X] • Invert slab: Yes [X] No [ ]	
Embankment Condition and Erosion Control Measures	Embankments are stable	
Road Under the Bridge	• None [ ] • No. of Traffic Lanes: • Width of Median: • Width of Shoulder: Left Right • Width of Sidewalk: Left Right	n/a

MISCELLANEOUS FEATURES	DESCRIPTION	REMARKS
Evidence of Previous Work	[ ] Seismic Retrofit [ ] Rehab & Repairs	
Visible Utilities	• Gas [X] Water [X] Sewer [X] • Electrical [X] Telecommunication [ ] • Other Utilities: • Structure Lighting: • Manhole on Deck:	Electrical wires overhead
Availability of Detours	Detour not possible	
Drainage Facilities on Structure	• None [X] •	
Drainage Facilities Under Structure	None	
Existing Facilities at Structure	• Retaining Walls: None [ ] Integral [ ] Near Abuts [X]	Private property, deck and retaining just downstream of the bridge
Visual Hydraulic Assessment – Fish Passage	Flow present [X] Fish Spawning Route [ ]	



Photo 3 – View of one bridge edge. Private property and this facility comingle on this side



Photo 4 - Looking at the opposite edge of the bridge from above



Photo 5 – Private property and scour pool beyond the bridge invert on the downstream side



Photo 6 – View of upstream



Photo 7 – Heavy moss accumulation prevents full observation of concrete cracks and spalls



Photo 8 – Concrete abraded due to swift flows



Photo 9 – Utility pipes crossing the creek under the deck and in the flow area



Photo 10 – Creek scour below the concrete invert under the bridge

MILL VALLEY STRUCTURE NO. 12

STRUCTURE NO. 12 – CASCADE DRIVE OVER TRIBUTARY TO CASCADE CREEK



Photo 1 - Street Level Looking North



Photo 2 – Street Level Looking South

SUMMARY & RECOMMENDATIONS

The culvert was visually inspected by Nader Tamannaie, PE, on April 1, 2020.

The field notes and photos are recorded in the subsequent pages of this section.

General Observations

This is the site of a 24" ϕ reinforced concrete pipe (RCP). The RCP runs from the tributary across Cascade Dr., outlets into private property where it runs in an open dirt channel to Cascade Creek. The culvert has a steel pipe trash rack at its inlet, which is damaged. The RCP and its inlet and outlet are mostly in good condition and functioning well.

Structure's Qualitative Health & Serviceability Condition Score (0-100): < 90

Qualitative Estimate of Structure's Safe Remaining Life: < 40 years

Recommendations

1. Repair the trash rack rib that has pulled out of inlet invert.
2. Place light riprap to control erosion, especially at the outlet.

Urgency of Maintenance Needs

1. The fixing of the trash rack should be a maintenance item.
2. The City may work with the private property owner to place rock riprap at the outlet in the next five years.

Approximate Cost of Rehabilitation or Repairs

Part of routine, annual maintenance activities and no extra budget allocation is necessary.

FIELD OBSERVATION NOTES

Observation Date and Time: 4-1-20, 9:00 am. Caltrans District: 4 County: Marin

Facility Carried: Cascade Drive Feature Intersected: Tributary to Cascade Bridge ☐ Culvert ☒

Mill Valley Crossing No: 12 Caltrans Bridge No: _____ Year Built: _____

Total Width: ____ Total Length 27'± No. of Spans (Bridge): ____ No. of Chambers (Culvert): 1

Site Coordinates (Apple iPhone): 37° 54' 31" N & 122° 33' 37" W Weather: Clear

Street Posted for Truck Weight Limit ☐ Speed Limit ☐ Nearest Postal Address: at Wainwright

SUPERSTRUCTURE AND TOPSIDE COMPONENTS	DESCRIPTION	CONDITION REMARKS
Superstructure Basics	• Structure Type & Materials: RCP • Alignment: Curved ☐ Tangent ☒ • Superstructure Depth: • Span Lengths: • Waterway Opening Height: • Skew at Abutments: • Curb-to-Curb Width: • Expansion Joints: n/a • Culvert ϕ or Dimensions: 24"	Bent pipe trash rack at inlet to the RCP. RCP runs from the tributary across Cascade Dr., outlets into private property where it runs in an open dirt channel to Cascade Creek.
Railings, Sidewalks & Curbs	• Railing Type: Wood Left ☐ Right ☒ • Railing Height: Left ☐ Right ☐ • Sidewalks on ____ side(s) • Width of Sidewalk: Left: Right: • Curb Height: • Median Barrier: Yes ☐ No ☐	n/a
Deck Surface	• AC ☒ Concrete ☐ Wood ☐	
Span Hinges n/a	• None ☐	n/a
Restrainers n/a	At: Abutments ☐ Bents ☐ None ☐	n/a
Soffit Opening Locations n/a	• None ☐	n/a
Traffic Lanes on Structure	• No. of Traffic Lanes: 2 • Width of Median: • Width of Shoulder, Left: Right:	
Approaches	• Approach Slab at: BB ☐ EB ☐ None ☒ • No. of Traffic Lanes: 2 • Width of Median: None • Width of Shoulder: None Left: Right 2'± • Width of Sidewalk: None Left: Right: • Railing Type: Left ☐ Right ☐ • Railing Height: Left: Right:	

SUBSTRUCTURE AND UNDERSIDE COMPONENTS	DESCRIPTION	CONDITION REMARKS
Abutments Types & Wingwalls	• Abutment Types: n/a • Integral wingwalls ☐ and/ or Headwalls ☒	Fasteners to one of the trash rack ribs have pulled out and the rib is out of alignment
Bent	• Materials: • Number of bents: • Pier Wall Type ☐ Column Type ☐ • X-sectional Dimensions: • Skew at Bents:	n/a
Piling	• Not Visible ☐ Pile Type: • Pile Extension:	n/a
Abutment and/or Bent Footings	• Footings: Visible ☐ Not Visible ☐ • Invert slab: Yes ☐ No ☐	n/a
Embankment Condition and Erosion Control Measures	There is erosion at both inlet and outlet. Light riprap would help at the outlet.	
Road Under the Bridge	• None ☐ • No. of Traffic Lanes: • Width of Median: • Width of Shoulder: Left: Right • Width of Sidewalk: Left: Right	n/a

MISCELLANEOUS FEATURES	DESCRIPTION	REMARKS
Evidence of Previous Work	☐ Seismic Retrofit ☐ Rehab & Repairs	
Visible Utilities	• Gas ☐ Water ☐ Sewer ☐ • Electrical ☒ Telecommunication ☒ • Other Utilities: Fire hydrant at the site • Structure Lighting: • Manhole on Deck:	
Availability of Detours	Detour or stage construction	
Drainage Facilities on Structure n/a	• None ☐ • Tow drain inlet (DI) and grates at culvert inlets	
Drainage Facilities Under Structure		n/a
Existing Facilities at Structure	• Retaining Walls: None ☒ Integral ☐ Near Abuts ☐	
Visual Hydraulic Assessment – Fish Passage	Flow present ☐ Fish Spawning Route ☐	



Photo 3 – Culvert inlet at the tributary to Cascade Creek



Photo 4 - Culvert outet in private property leading to Cascade Creek



Photo 5 – View inlet – damaged trash rack is evident

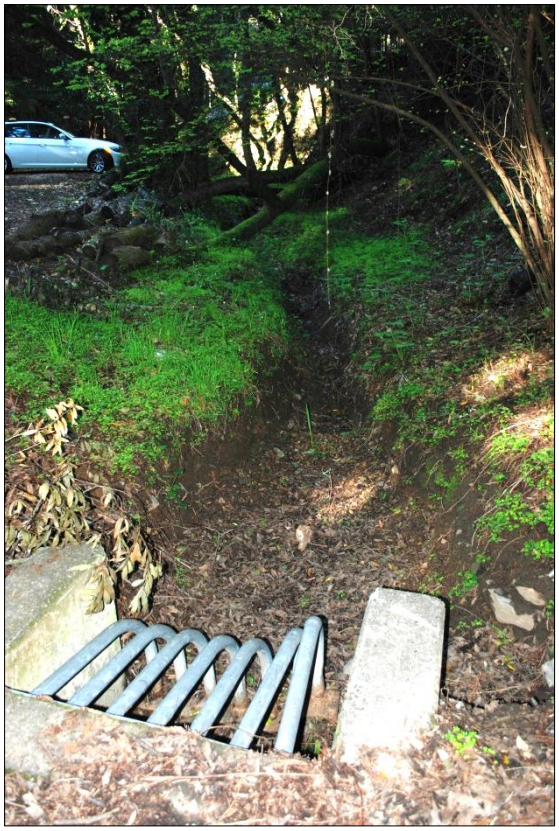

Photo 6 – The tributary upstream of pipe inlet



Photo 7 – The tributary running under private propoerty line



Photo 8 – Pipe outlet in private property on the way to Cascade Creek

MILL VALLEY STRUCTURE NO. 13

STRUCTURE NO. 13 – WAINWRIGHT DRIVEWAY OVER T CASCADE CREEK RIBUTARY



Photo 1 - Street Level Looking east



Photo 2 – Street Level Looking west

SUMMARY & RECOMMENDATIONS

The culvert was visually inspected by Nader Tamannaie, PE, on April 1, 2020.

The field notes and photos are recorded in the subsequent pages of this section.

General Observations

This is a 2' x 2' RCB culvert under a driveway turning from Wainwright Place that is confirmed through MarinMap to be in the City ROW. The culvert is in reasonable condition and functional.

Structure's Qualitative Health & Serviceability Condition Score (0-100): < 80

Qualitative Estimate of Structure's Safe Remaining Life: < 40 years

Recommendations

1. The inlet needs to be cleared of sediments and foliage.
2. Railings need to be installed on both sides for fall protection

Urgency of Maintenance Needs

1. Fall protection railings are important to be done soon.
2. Sediment cleaning should be made part of ongoing maintenance.

Approximate Cost of Rehabilitation or Repairs: $14,000

FIELD OBSERVATION NOTES

Observation Date and Time: 4-1-20, 9:30 am. Caltrans District: 4 County: Marin

Facility Carried: Driveway/Wainwright Ct. Feature Intersected: Cascade Tributary Bridge ☐ Culvert ☒

Mill Valley Crossing No: 13 Caltrans Bridge No: __ Year Built: _____

Total Width: ____ Total Length: 23'± No. of Spans (Bridge): ____ No. of Chambers (Culvert): 1

Site Coordinates (Apple iPhone): 37° 54' 30" N & 122° 33' 39" W Weather: Clear

Street Posted for Truck Weight Limit ☐ Speed Limit ☐ Nearest Postal Address: # 20 Wainwright

SUPERSTRUCTURE AND TOPSIDE COMPONENTS	DESCRIPTION	CONDITION REMARKS
Superstructure Basics	• Structure Type & Materials: RCB Culvert • Alignment: Curved ☐ Tangent ☒ • Superstructure Depth: • Span Lengths: • Waterway Opening Height:@ inlet 8', outlet 7' • Skew at Abutments: • Curb-to-Curb Width: 21' • Expansion Joints: n/a • Culvert ϕ or Dimensions: each 24" X 24"	Reinforced Concrete Box (RCB) culvert is under the driveway to # 20 Wainwright Place and verified to be in the City's jurisdiction
Railings, Sidewalks & Curbs	• Railing Type: Left ☐ Right ☐ • Railing Height: Left ☐ Right ☐ • Sidewalks on ____ side(s) • Width of Sidewalk: Left: Right: • Curb Height: 2"± (broken piece of right curb) • Median Barrier: Yes ☐ No ☐	There is no fall protection railing and person may drop 7'-8' at either side
Deck Surface	• AC ☒ Concrete ☐ Wood ☐	
Span Hinges n/a	• None ☐	n/a
Restrainers n/a	At: Abutments ☐ Bents ☐ None ☒	n/a
Soffit Opening Locations	• None ☐	n/a
Traffic Lanes on Structure	• No. of Traffic Lanes: 2 • Width of Median: • Width of Shoulder, Left: Right:	
Approaches	• Approach Slab at: BB ☐ EB ☐ None ☒ • No. of Traffic Lanes: 2 • Width of Median: None • Width of Shoulder: None Left: Right 2'± • Width of Sidewalk: None Left: Left • Railing Type: Left ☐ Right ☐ • Railing Height: Left: Right:	

SUBSTRUCTURE AND UNDERSIDE COMPONENTS	DESCRIPTION	CONDITION REMARKS
Abutments Types & Wingwalls	• Abutment Types: n/a • Integral wingwalls [X] and/ or Headwalls [X]	
Bent	• Materials: • Number of bents: • Pier Wall Type [ ] Column Type [ ] • X-sectional Dimensions: • Skew at Bents:	n/a
Piling	• Not Visible [ ] Pile Type: • Pile Extension:	n/a
Abutment and/or Bent Footings n/a	• Footings: Visible [ ] Not Visible [ ] • Invert slab: Yes [ ] No [ ]	
Embankment Condition and Erosion Control Measures	Erosion at culvert inlet and outlet. Flow capacity through the culvert has been reduced to about half due to blockage by soil and foliage.	Checked MarinMap for ownership of driveway. Wainwright ROW is nearly 50' wide.
Road Under the Bridge	• None [ ] • No. of Traffic Lanes: • Width of Median: • Width of Shoulder: Left: Right • Width of Sidewalk: Left: Right	n/a

MISCELLANEOUS FEATURES	DESCRIPTION	REMARKS
Evidence of Previous Work	[ ] Seismic Retrofit [ ] Rehab & Repairs	
Visible Utilities	• Gas [ ] Water [ ] Sewer [ ] • Electrical [X] Telecommunication [X] • Other Utilities: • Structure Lighting: • Manhole on Deck:	
Availability of Detours	Detour or stage construction	
Drainage Facilities on Structure	• None [X] •	
Drainage Facilities Under Structure		n/a
Existing Facilities at Structure	• Retaining Walls: inlet & outlet rock headwalls None [ ] Integral [X] Near Abuts [ ]	
Visual Hydraulic Assessment – Fish Passage	Flow present [X] Fish Spawning Route [ ]	Small flow



Photo 3 – Culvert outlet from under the driveway



Photo 4 - Culvert inlet



Photo 5 – View of upstream



Photo 6 – View of downstream. Broken curb in the foreground

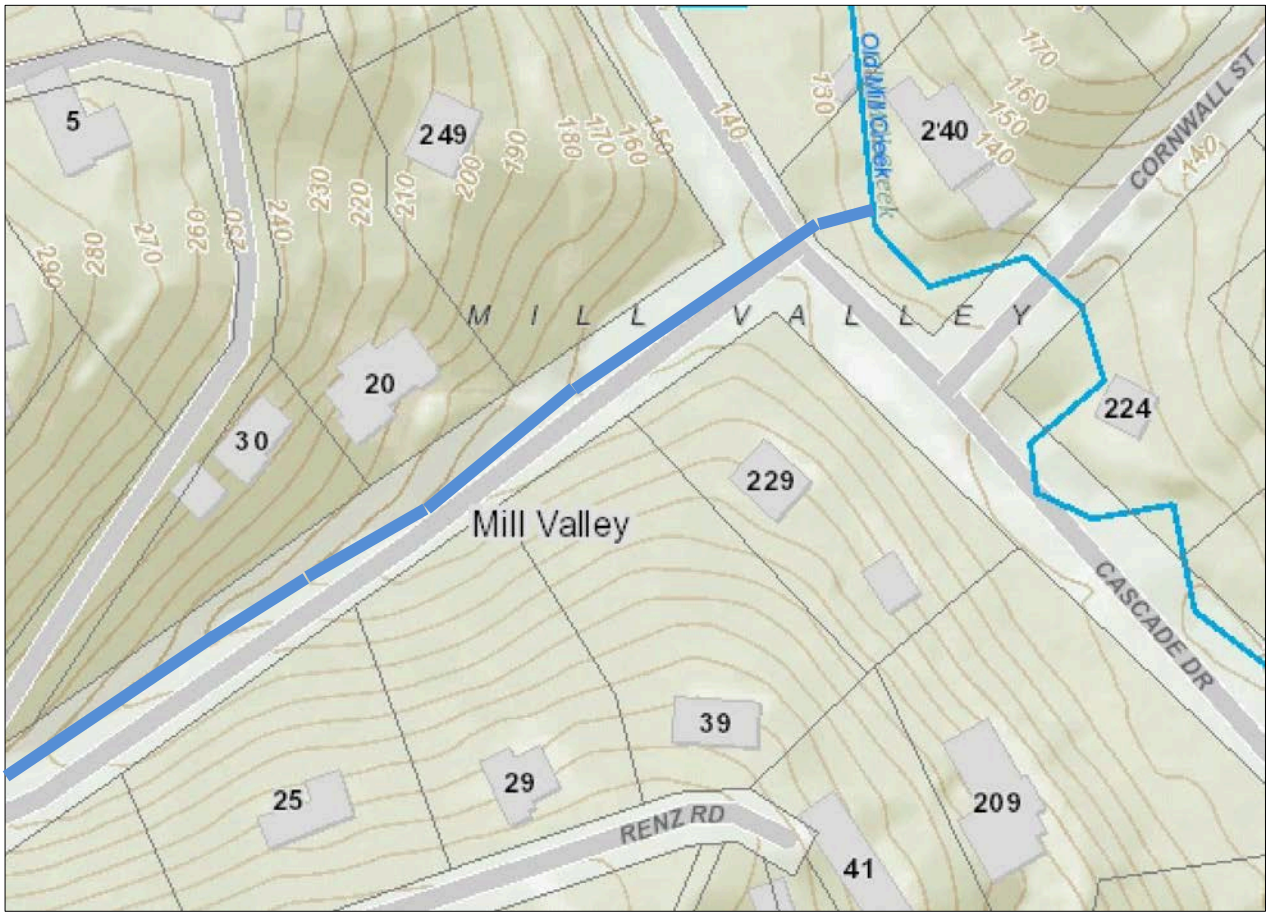

Photo 7 – Connecting the bends in contours (thicker dark blue line), MarinMap shows the small tributary being in City ROW

MILL VALLEY STRUCTURE NO. 14

STRUCTURE NO. 14 – CORNWALL STREET BRIDGE OVER CASCADE CREEK



Photo 1 - Street Level Looking West



Photo 2 - Street Level Looking East

SUMMARY & RECOMMENDATIONS

The Bridge was visually inspected by Nader Tamannaie, PE, on April 1, 2020.

The field notes and photos are recorded in the subsequent pages of this section.

General Observations

The bridge, a reinforced concrete slab with integral abutments and short wingwalls, is in serviceable condition. It is an aged structure, estimated to be upwards of 80 years old. Its foundations are unknown.

Structure's Qualitative Health & Serviceability Condition Score (0-100): < 50

Qualitative Estimate of Structure's Safe Remaining Life: < 25 years

Recommendations

It is recommended that the AC on the bridge deck and its approached be coldplaned, removed and the approached repaved. For the deck, if cracks exist on it, they should be sealed with methacrylate and/or polyester concrete.

Urgency of Maintenance Needs

The recommended procedure above is not critical and can be done in the next 5 years.

Approximate Cost of Rehabilitation or Repairs: $40,000

FIELD OBSERVATION NOTES

Observation Date and Time: 4-1-20, 9:55 a.m. Caltrans District: 4 County: Marin

Facility Carried: Cornwall Street Feature Intersected: Cascade Creek Bridge [X] Culvert [ ]

Mill Valley Crossing No: 14 Caltrans Bridge No: _____ Year Built: _____

Total Width: 20'± Total Length: 13'± No. of Spans (Bridge): 1 No. of Chambers (Culvert): _____

Site Coordinates (Apple iPhone): 37° 54' 32" N & 122° 33' 35" W Weather: Clear

Street Posted for Truck Weight Limit [ ] Speed Limit [ ] Nearest Postal Address 224 Cornwall

SUPERSTRUCTURE AND TOPSIDE COMPONENTS	DESCRIPTION	CONDITION REMARKS
Superstructure Basics	• Structure Type & Materials: R/C slab • Alignment: Curved [ ] Tangent [X] • Superstructure Depth: 11" • Span Lengths:11'± • Waterway Opening Height: 11'± • Skew at Abutments: 0° • Curb-to-Curb Width: 17'± • Expansion Joints: n/a • Culvert ϕ or Dimensions: n/a	
Railings, Sidewalks & Curbs	• Railing Type: Concrete Left [X] Right [X] • Railing Height: 2'-5" Left [X] Right [X] • Sidewalk(s) on 0 side(s) • Width of Sidewalk: Left: Right: • Curb Height: 4" • Median Barrier: Yes [ ] No: [X]	
Deck Surface	• AC [X] Concrete [ ] Wood [ ]	
Span Hinges	• None [ ]	n/a
Restrainers	At: Abutments [ ] Bents [ ] None [ ]	n/a
Soffit Opening Locations	• None [ ]	n/a
Traffic Lanes on Bridge	• No. of Traffic Lanes: 1 • Width of Median: None • Width of Shoulder, Left: None Right: None	
Approaches	• Approach Slab at: BB [ ] EB [ ] None [X] • No. of Traffic Lanes: 2 • Width of Median: None • Width of Shoulder: None Left: Right: • Width of Sidewalk: None Left: Right: • Railing Type: n/a Left [ ] Right [ ] • Railing Height: n/a Left: Right	

SUBSTRUCTURE AND UNDERSIDE COMPONENTS	DESCRIPTION	CONDITION REMARKS
Abutments Types & Wingwalls	• Abutment Types: Conc, integral with deck • Integral wingwalls [X] and/ or Headwalls: [ ]	Four wingwalls
Bent	• Materials: • Number of bents: • Pier Wall Type [ ] Column Type [ ] • X-sectional Dimensions: • Skew at Bents:	n/a
Piling	• Not Visible [X] Pile Type: • Pile Extension:	
Abutment and/or Bent Footings	• Footings: Visible [ ] Not Visible [X] • Invert slab: Yes [X] No [ ]	
Embankment Condition and Erosion Control Measures	Embankments are stable	
Road Under the Bridge	• None [ ] • No. of Traffic Lanes: • Width of Median: • Width of Shoulder: Left Right • Width of Sidewalk: Left Right	n/a

MISCELLANEOUS FEATURES	DESCRIPTION	REMARKS
Evidence of Previous Work	[ ] Seismic Retrofit [ ] Rehab & Repairs	
Visible Utilities	• Gas [X] Water [X] Sewer [X] • Electrical [X] Telecommunication [ ] • Other Utilities: • Structure Lighting: • Manhole on Deck:	
Availability of Detours	Detour not possible	
Drainage Facilities on Structure	• None [X] •	
Drainage Facilities Under Structure	None	
Existing Facilities at Structure	• Retaining Walls: None [ ] Integral [ ] Near Abuts [X]	Long, curved retaining wall on downstream left side
Visual Hydraulic Assessment – Fish Passage	Flow present [X] Fish Spawning Route [ ]	



Photo 3 – View of utility pipes. Heavy moss on concrete prevents full view of cracks and spalls.



Photo 4 – City survey monument on the bridge rail



Photo 5 – View looking upstream. Note large utility pipes on the side and below the bridge



Photo 6 – View of downstream from the bridge. Retaining wall on the right covered by ivy

MILL VALLEY STRUCTURE NO. 15

STRUCTURE NO. 15 – DOUBLE DRIVEWAYS OVER DRAINAGE PIPE TO CASCADE CREEK



Photo 1 - Street Level Looking East



Photo 2 – Street Level Looking West

SUMMARY & RECOMMENDATIONS

The Bridge was visually inspected by Nader Tamannaie, PE, on April 1, 2020.

The field notes and photos are recorded in the subsequent pages of this section.

General Observations

This is the site of a 24” CMP to handle drainage under double driveways servicing residential locations. The CMP comes out as a 21” X 21” RCB culvert at the other end. The culvert is in reasonable condition.

Structure’s Qualitative Health & Serviceability Condition Score (0-100): < 80

Qualitative Estimate of Structure’s Safe Remaining Life: < 40 years

Recommendations

None.

Urgency of Maintenance Needs

None.

Approximate Cost of Rehabilitation or Repairs None

FIELD OBSERVATION NOTES

Observation Date and Time: 4-1-20, 10:30 a.m. Caltrans District: 4 County: Marin

Facility Carried: Driveway/Cornwall St. Feature Intersected: Drainage to Cascade Bridge ☐ Culvert ☒

Mill Valley Crossing No: 15 Caltrans Bridge No: _____ Year Built: _____

Total Width: ____ Total Length: 31'± No. of Spans (Bridge): ___ No. of Chambers (Culvert): 1

Site Coordinates (Apple iPhone): 37° 54' 33" N & 122° 33' 32" W Weather: Clear

Street Posted for Truck Weight Limit ☐ Speed Limit ☐ Nearest Postal Address: # 25 Cornwall

SUPERSTRUCTURE AND TOPSIDE COMPONENTS	DESCRIPTION	CONDITION REMARKS
Superstructure Basics	• Structure Type & Materials: CMP/RCB Culvert • Alignment: Curved ☐ Tangent ☒ • Superstructure Depth: • Span Lengths: • Waterway Opening Height:@ inlet 8', outlet 7' • Skew at Abutments: • Curb-to-Curb Width: 21' • Expansion Joints: n/a • Culvert ϕ or Dimensions: 24" ϕ to 21" X 21"	Corrugated metal pipe (CMP) at inlet and reinforced concrete box (RCB) culvert at outlet
Railings, Sidewalks & Curbs	• Railing Type: Left ☐ Right ☒ • Railing Height: Left ☐ Right ☐ • Sidewalks on ____ side(s) • Width of Sidewalk: Left: Right: • Curb Height: • Median Barrier: Yes ☐ No ☐	
Deck Surface	• AC ☒ Concrete ☐ Wood ☐	
Span Hinges	• None ☐	n/a
Restrainers	At: Abutments ☐ Bents ☐ None ☐	n/a
Soffit Opening Locations n/a	• None ☐	n/a
Traffic Lanes on Structure	• No. of Traffic Lanes: 2 • Width of Median: • Width of Shoulder, Left: Right:	
Approaches	• Approach Slab at: BB ☐ EB ☐ None ☒ • No. of Traffic Lanes: 2 • Width of Median: n/a • Width of Shoulder: None Left: Right 2'± • Width of Sidewalk: None Left: Left • Railing Type: Left ☐ Right ☐ • Railing Height: Left: Right:	

SUBSTRUCTURE AND UNDERSIDE COMPONENTS	DESCRIPTION	CONDITION REMARKS
Abutments Types & Wingwalls	• Abutment Types: n/a • Integral wingwalls [X] and/ or Headwalls [X]	
Bent	• Materials: • Number of bents: • Pier Wall Type [ ] Column Type [ ] • X-sectional Dimensions: • Skew at Bents:	n/a
Piling	• Not Visible [ ] Pile Type: • Pile Extension:	n/a
Abutment and/or Bent Footings n/a	• Footings: Visible [ ] Not Visible [ ] • Invert slab: Yes [X] No [ ]	16'± of invert after outlet
Embankment Condition and Erosion Control Measures	A low (2' high) stacked rock wall exists for 16' after culvert outlet	Stable low banks on either side of inlet and outlet
Road Under the Bridge n/a	• None [ ] • No. of Traffic Lanes: • Width of Median: • Width of Shoulder: Left: Right • Width of Sidewalk: Left: Right	n/a

MISCELLANEOUS FEATURES	DESCRIPTION	REMARKS
Evidence of Previous Work	[ ] Seismic Retrofit [ ] Rehab & Repairs	
Visible Utilities	• Gas [ ] Water [X] Sewer [X] • Electrical [ ] Telecommunication [ ] • Other Utilities: • Structure Lighting: • Manhole on Deck:	
Availability of Detours	Detour or stage construction	
Drainage Facilities on Structure	• None [X]	
Drainage Facilities Under Structure		n/a
Existing Facilities at Structure	• Retaining Walls: None [ ] Integral [ ] Near Abuts [ ]	
Visual Hydraulic Assessment – Fish Passage	Flow present [X] Fish Spawning Route [ ]	



Photo 3 – Culvert inlet



Photo 4 - Culvert outet



Photo 5 – Upstream of culvert



Photo 6 – Downstream of culvert

MILL VALLEY STRUCTURE NO. 16

STRUCTURE NO. 16 – EUGENE STREET BRIDGE OVER CASCADE CREEK



Photo 1 - Street Level Looking South



Photo 2 - Street Level Looking North

SUMMARY & RECOMMENDATIONS

The Bridge was visually inspected by Nader Tamannaie, PE, on April 1, 2020.

The field notes and photos are recorded in the subsequent pages of this section.

General Observations

The bridge, a reinforced concrete slab with integral abutments and short wingwalls, is mostly in serviceable condition. It is an aged structure, estimated to be upwards of 80 years old. Its foundations are unknown. There is evidence of concrete patchwork at the abutment, next to where a large crack exists.

Structure's Qualitative Health & Serviceability Condition Score (0-100): < 45

Qualitative Estimate of Structure's Safe Remaining Life: < 25 years

Recommendations

1. The large abutment crack needs to be repaired.
2. Plug the square opening in downstream retaining wall adjacent to bridge wingwall.
3. Repair the barrier with spalled concrete exposing its rebar.

Urgency of Maintenance Needs

Recommendation No. 1 above should be scheduled for repairs in the next 5 years. The other repairs can be done at the same time.

Approximate Cost of Rehabilitation or Repairs: $28,000

FIELD OBSERVATION NOTES

Observation Date and Time: 4-1-20, 11:00 a.m. Caltrans District: 4 County: Marin

Facility Carried: Eugene Street Feature Intersected: Cascade Creek Bridge [X] Culvert [ ]

Mill Valley Crossing No: 16 Caltrans Bridge No: _____ Year Built: _____

Total Width: 30'± Total Length: 15'± No. of Spans (Bridge): 1 No. of Chambers (Culvert): _____

Site Coordinates (Apple iPhone): 37° 54' 28" N & 122° 33' 33" W Weather: Clear

Street Posted for Truck Weight Limit [ ] Speed Limit [ ] Nearest Postal Address No. 202 Eugene

SUPERSTRUCTURE AND TOPSIDE COMPONENTS	DESCRIPTION	CONDITION REMARKS
Superstructure Basics	• Structure Type & Materials: R/C slab • Alignment: Curved [ ] Tangent [X] • Superstructure Depth: 11" • Span Lengths: 12'± • Waterway Opening Height: 11'± • Skew at Abutments: 5° • Curb-to-Curb Width: 17'± • Expansion Joints: n/a • Culvert ϕ or Dimensions: n/a	
Railings, Sidewalks & Curbs	• Railing Type: Concrete Left [X] Right [X] • Railing Height: 2'-2" Left [X] Right [X] • Sidewalk(s) on 0 side(s) • Width of Sidewalk: Left: 5' Right: 5' • Curb Height: 3" • Median Barrier: Yes [ ] No: [X]	Upstream railing has deteriorated and rebar is exposed.
Deck Surface	• AC [X] Concrete [ ] Wood [ ]	
Span Hinges	• None [X]	
Restrainers	At: Abutments [ ] Bents [ ] None [X]	
Soffit Opening Locations	• None [X]	
Traffic Lanes on Bridge	• No. of Traffic Lanes: 2 • Width of Median: None • Width of Shoulder, Left: None Right: None	
Approaches	• Approach Slab at: BB [ ] EB [ ] None [X] • No. of Traffic Lanes: 2 • Width of Median: None • Width of Shoulder: None Left: 2' Right: 2' • Width of Sidewalk: None Left: Right: • Railing Type: n/a Left [ ] Right [ ] • Railing Height: n/a Left: Right	

SUBSTRUCTURE AND UNDERSIDE COMPONENTS	DESCRIPTION	CONDITION REMARKS
Abutments Types & Wingwalls	• Abutment Types: Conc, integral with deck • Integral wingwalls [X] and/ or Headwalls: [ ]	Left abutment has a large & wide crack, to be repaired.
Bent n/a	• Materials: • Number of bents: • Pier Wall Type [ ] Column Type [ ] • X-sectional Dimensions: • Skew at Bents:	
Piling	• Not Visible [X] Pile Type: • Pile Extension:	
Abutment and/or Bent Footings	• Footings: Visible [ ] Not Visible [X] • Invert slab: Yes [X] No [ ]	
Embankment Condition and Erosion Control Measures	There is scour at the right abutment at downstream end. There is riprap on the let abutment side, upstream.	
Road Under the Bridge n/a	• None [ ] • No. of Traffic Lanes: • Width of Median: • Width of Shoulder: Left Right • Width of Sidewalk: Left Right	

MISCELLANEOUS FEATURES	DESCRIPTION	REMARKS
Evidence of Previous Work	[ ] Seismic Retrofit [ ] Rehab & Repairs	
Visible Utilities	• Gas [X] Water [X] Sewer [X] • Electrical [X] Telecommunication [X] • Other Utilities: • Structure Lighting: • Manhole on Deck:	
Availability of Detours	Detour possible	
Drainage Facilities on Structure	• None [X] •	
Drainage Facilities Under Structure	12” CMP at right bank, downstream	
Existing Facilities at Structure	• Retaining Walls: None [ ] Integral [X] Near Abuts [X]	5’± high retaining wall, downstream left
Visual Hydraulic Assessment – Fish Passage	Flow present [X] Fish Spawning Route [ ]	



Photo 3 – Utility poles on the right



Photo 4 – Upstream barrier railing deterioration



Photo 5 – Drain and utility pipes under the deck



Photo 6 – Evidence of previous abutment concrete patching and a large diagonal crack at far end



Photo 7 – Bridge wingwall switching to cemented rock slope protection



Photo 8 – Scour at right abutment corner and wingwall, downstream. Purpose of right square opening in wingwall is unknown.



Photo 9 – 12” CMP through the right bank, downstream

MILL VALLEY STRUCTURE NO. 17

STRUCTURE NO. 17 – MARION AVENUE OVER TRIBUTARY TO CASCADE CREEK



Photo 1 - Street Level Looking East



Photo 2 – Street Level Looking West

SUMMARY & RECOMMENDATIONS

The culvert was visually inspected by Nader Tamannaie, PE, on April 1, 2020.

The field notes and photos are recorded in the subsequent pages of this section.

General Observations

This is the site of a 6' wide by 5' high RCB culvert for running the flows of a tributary to Cascade Creek under Marion Avenue. The culvert has a steel pipe trash rack at its inlet. The culvert is fully functional and its surrounding soils are stable.

Structure's Qualitative Health & Serviceability Condition Score (0-100): < 80

Qualitative Estimate of Structure's Safe Remaining Life: < 40 years

Recommendations

1. Repair the disengaged trash rack rib.
2. Clear the foliage from the culvert outlet area.
3. Consider placing rock riprap at culvert outlet.

Urgency of Maintenance Needs

Schedule the recommended repairs to be done as part of routine maintenance in the next 1-5 years.

Approximate Cost of Rehabilitation or Repairs: None

FIELD OBSERVATION NOTES

Observation Date and Time: 4-1-20, 11:45 a.m. Caltrans District: 4 County: Marin

Facility Carried: Marion Avenue . Feature Intersected: Tributary to Cascade Bridge [X] Culvert [ ]

Mill Valley Crossing No: 17 Caltrans Bridge No: _____ Year Built: _____

Total Width: ____ Total Length: 42'± No. of Spans (Bridge): ___ No. of Chambers (Culvert): 1

Site Coordinates (Apple iPhone): 37° 54' 24" N & 122° 33' 39" W Weather: Clear

Street Posted for Truck Weight Limit [ ] Speed Limit [ ] Nearest Postal Address: At Earnscliff Trail

SUPERSTRUCTURE AND TOPSIDE COMPONENTS	DESCRIPTION	CONDITION REMARKS
Superstructure Basics	• Structure Type & Materials: RCB Culvert • Alignment: Curved [ ] Tangent [X] • Superstructure Depth: • Span Lengths: • Waterway Opening Height:@ inlet 8', outlet 7' • Skew at Abutments: • Curb-to-Curb Width: 31' • Expansion Joints: n/a • Culvert ϕ or Dimensions: 6' wide X 5' high	Reinforced concrete box (RCB) culvert
Railings, Sidewalks & Curbs	• Railing Type: n/a Left [ ] Right [ ] • Railing Height: Left [ ] Right [ ] • Sidewalks on ____ side(s) • Width of Sidewalk: Left: Right: • Curb Height: 6" • Median Barrier: Yes [ ] No [ ]	
Deck Surface	• AC [X] Concrete [ ] Wood [ ]	
Span Hinges	• None [ ]	n/a
Restrainers	At: Abutments [ ] Bents [ ] None [ ]	n/a
Soffit Opening Locations n/a	• None [ ]	n/a
Traffic Lanes on Structure	• No. of Traffic Lanes: 2 • Width of Median: • Width of Shoulder, Left: Right:	
Approaches	• Approach Slab at: BB [ ] EB [ ] None [X] • No. of Traffic Lanes: 2 • Width of Median: n/a • Width of Shoulder: None Left: Right • Width of Sidewalk: None Left: Right • Railing Type: Left [ ] Right [ ] • Railing Height: Left: Right:	

SUBSTRUCTURE AND UNDERSIDE COMPONENTS	DESCRIPTION	CONDITION REMARKS
Abutments Types & Wingwalls	• Abutment Types: n/a • Integral wingwalls [X] and/ or Headwalls [X]	Rash rack at entry is damaged
Bent n/a	• Materials: • Number of bents: • Pier Wall Type [ ] Column Type [ ] • X-sectional Dimensions: • Skew at Bents:	
Piling n/a	• Not Visible [ ] Pile Type: • Pile Extension:	
Abutment and/or Bent Footings n/a	• Footings: Visible [ ] Not Visible [ ] • Invert slab: Yes [X] No [ ]	16'± of invert after outlet
Embankment Condition and Erosion Control Measures	The bank on either side are stable.	Clear foliage from culvert outlet area.
Road Under the Bridge n/a	• None [ ] • No. of Traffic Lanes: • Width of Median: • Width of Shoulder: Left: Right • Width of Sidewalk: Left: Right	

MISCELLANEOUS FEATURES	DESCRIPTION	REMARKS
Evidence of Previous Work	[ ] Seismic Retrofit [ ] Rehab & Repairs	
Visible Utilities	• Gas [ ] Water [ ] Sewer [ ] • Electrical [X] Telecommunication [X] • Other Utilities: • Structure Lighting: • Manhole on Deck:	
Availability of Detours	Detour or stage construction	
Drainage Facilities on Structure	• None [ ] • DI at curb 10'± away.	
Drainage Facilities Under Structure		24" ϕ RCP runs from the DI to culvert side wall.
Existing Facilities at Structure	• Retaining Walls: None [X] Integral [ ] Near Abuts [ ]	
Visual Hydraulic Assessment – Fish Passage	Flow present [X] Fish Spawning Route [ ]	



Photo 3 – Culvert inlet



Photo 4 - Culvert outet



Photo 5 – Upstream of culvert



Photo 6 – Downstream of culvert



Photo 7 – DI near the culvert with 24” RCP running to the the structure underground



Photo 8 – Through the culvert view, with 24” RCP running into its side wall



Photo 9 – Earnscliff Park trail adjacent to upstream side of the tributary



Photo 10 – Damaged trash rack rib (fifth from the top of photo)

MILL VALLEY STRUCTURE NO. 18

STRUCTURE NO. 18 – CASCADE DR. BRIDGE OVER TRIBUTARY TO CASCADE CREEK



Photo 1 - Street Level Looking South



Photo 2 - Street Level Looking North

SUMMARY & RECOMMENDATIONS

The Bridge was visually inspected by Nader Tamannaie, PE, on April 1, 2020.

The field notes and photos are recorded in the subsequent pages of this section.

General Observations

The bridge, a reinforced concrete slab with integral abutments and short wingwalls, is mostly in serviceable condition. It is an aged structure, estimated to be upwards of 80 years old. The structure has a concrete invert throughout its length. Its foundations are unknown. There is evidence of concrete patchwork at the abutment, next to where a large crack exists.

Structure's Qualitative Health & Serviceability Condition Score (0-100): < 55

Qualitative Estimate of Structure's Safe Remaining Life: < 20 years

Recommendations

The structure has no critical flaws. Replace the bridge in the next 20 years.

Urgency of Maintenance Needs

None

Approximate Cost of Rehabilitation or Repairs: None

FIELD OBSERVATION NOTES

Observation Date and Time: 4-1-20, 12:00 noon Caltrans District: 4 County: Marin

Facility Carried: Cascade Drive Feature Intersected: Tributary to Cascade Creek Bridge [X] Culvert [ ]

Mill Valley Crossing No: 18 Caltrans Bridge No: _____ Year Built: _____

Total Width: 30'± Total Length: 12'± No. of Spans (Bridge): 1 No. of Chambers (Culvert): _____

Site Coordinates (Apple iPhone): 37° 54' 25" N & 122° 33' 32" W Weather: Clear

Street Posted for Truck Weight Limit [ ] Speed Limit [ ] Nearest Postal Address No. 202 Eugene

SUPERSTRUCTURE AND TOPSIDE COMPONENTS	DESCRIPTION	CONDITION REMARKS
Superstructure Basics	• Structure Type & Materials: R/C slab • Alignment: Curved [ ] Tangent [X] • Superstructure Depth: 12" • Span Lengths: 10'± • Waterway Opening Height: 6.5'± • Skew at Abutments: 0° • Curb-to-Curb Width: 27'± • Expansion Joints: n/a • Culvert ϕ or Dimensions: n/a	
Railings, Sidewalks & Curbs	• Railing Type: Concrete Left [X] Right [X] • Railing Height: 2'-0" Left [X] Right [X] • Sidewalk(s) on 2 side(s) • Width of Sidewalk: Left: 5' Right: 5' • Curb Height: 0" • Median Barrier: Yes [ ] No: [X]	Upstream railing has deteriorated and rebar is exposed.
Deck Surface	• AC [X] Concrete [ ] Wood [ ]	
Span Hinges	• None [X]	
Restrainers	At: Abutments [ ] Bents [ ] None [X]	
Soffit Opening Locations	• None [X]	
Traffic Lanes on Bridge	• No. of Traffic Lanes: 2 • Width of Median: None • Width of Shoulder, Left: None Right: None	
Approaches	• Approach Slab at: BB [ ] EB [ ] None [X] • No. of Traffic Lanes: 2 • Width of Median: None • Width of Shoulder: None Left: Right: • Width of Sidewalk: None Left: Right: • Railing Type: n/a Left [ ] Right [ ] • Railing Height: n/a Left: Right	

SUBSTRUCTURE AND UNDERSIDE COMPONENTS	DESCRIPTION	CONDITION REMARKS
Abutments Types & Wingwalls	• Abutment Types: Conc, integral with deck • Integral wingwalls [X] and/ or Headwalls: [ ]	Trash cabinet at one corner of the bridge at the surface.
Bent n/a	• Materials: • Number of bents: • Pier Wall Type [ ] Column Type [ ] • X-sectional Dimensions: • Skew at Bents:	
Piling	• Not Visible [X] Pile Type: • Pile Extension:	
Abutment and/or Bent Footings	• Footings: Visible [ ] Not Visible [X] • Invert slab: Yes [X] No [ ]	Stepped invert at exit area
Embankment Condition and Erosion Control Measures	There is scour at the right abutment at downstream end. There is riprap on the let abutment side, upstream.	
Road Under the Bridge n/a	• None [ ] • No. of Traffic Lanes: • Width of Median: • Width of Shoulder: Left Right • Width of Sidewalk: Left Right	

MISCELLANEOUS FEATURES	DESCRIPTION	REMARKS
Evidence of Previous Work	[ ] Seismic Retrofit [ ] Rehab & Repairs	
Visible Utilities	• Gas [X] Water [X] Sewer [X] • Electrical [X] Telecommunication [X] • Other Utilities: • Structure Lighting: • Manhole on Deck:	2 sewer manholes in the street
Availability of Detours	Stage construction	
Drainage Facilities on Structure	• None [X] •	
Drainage Facilities Under Structure	12” CMP at right bank, downstream	
Existing Facilities at Structure	• Retaining Walls: None [ ] Integral [X] Near Abuts [X]	Retaining wall right side downstream
Visual Hydraulic Assessment – Fish Passage	Flow present [X] Fish Spawning Route [ ]	



Photo 3 – Upstream edge of the bridge. Gas line in the foreground



Photo 4 – Downstream edge of the bridge



Photo 5 – View of the interior & multiple utility pipes in the flow



Photo 6 – Private garbage can cabinet at the end of the bridge



Photo 7 – 18” ф at right upstream wingwall

MILL VALLEY STRUCTURE NO. 19

STRUCTURE NO. 19 – CASCADE DRIVE BRIDGE OVER CASCADE CREEK



Photo 1 - Street Level Looking South



Photo 2 - Street Level Looking North

SUMMARY & RECOMMENDATIONS

The Bridge was visually inspected by Nader Tamannaie, PE, on April 1, 2020.

The field notes and photos are recorded in the subsequent pages of this section.

General Observations

1. The bridge is a reinforced concrete slab with integral abutments and wingwalls It is an aged structure, estimated to be upwards of 80 years old. Its foundations are unknown. The concrete is of poor quality and some of it has been abraded by swift flows, but the bridge is mostly in serviceable condition.

Structure's Qualitative Health & Serviceability Condition Score (0-100): < 50

Qualitative Estimate of Structure's Safe Remaining Life: < 25 years

Recommendations

1. The pipe railing is not safe for pedestrians and should have steel mesh attached to it for fall prevention.
2. The abraded concrete should be repaired in the next 5-10 years.

Urgency of Maintenance Needs

If the railings become the subject of repairs, they should be either replaced or the openings otherwise closed up by stretching and tying a galvanized steel mesh.

Approximate Cost of Rehabilitation or Repairs: $35,000

FIELD OBSERVATION NOTES

Observation Date and Time: 4-1-20, 1:00 p.m. Caltrans District: 4 County: Marin

Facility Carried: Cascade Drive Feature Intersected: Cascade Creek Bridge [X] Culvert [ ]

Mill Valley Crossing No: 19 Caltrans Bridge No: _____ Year Built: _____

Total Width: 18'± Total Length: 14'± No. of Spans (Bridge): 1 No. of Chambers (Culvert): _____

Site Coordinates (Apple iPhone): 37° 54' 25" N & 122° 33' 29" W Weather: Clear

Street Posted for Truck Weight Limit [ ] Speed Limit [ ] Nearest Postal Address No. 160 Cascade

SUPERSTRUCTURE AND TOPSIDE COMPONENTS	DESCRIPTION	CONDITION REMARKS
Superstructure Basics	• Structure Type & Materials: Filled Conc Arch • Alignment: Curved [ ] Tangent [X] • Superstructure Depth: 12" • Span Lengths: 10'± • Waterway Opening Height: 7'± • Skew at Abutments: 15° • Curb-to-Curb Width: 16'± • Expansion Joints: n/a • Culvert ϕ or Dimensions: n/a	
Railings, Sidewalks & Curbs	• Railing Type: Steel tube Left [X] Right [X] • Railing Height: 2'-0" Left [X] Right [X] • Sidewalk(s) on 0 side(s) • Width of Sidewalk: Left: Right: • Curb Height: n/a • Median Barrier: Yes [ ] No: [X]	Upstream railing has deteriorated and rebar is exposed.
Deck Surface	• AC [X] Concrete [ ] Wood [ ]	
Span Hinges	• None [X]	
Restrainers	At: Abutments [ ] Bents [ ] None [X]	
Soffit Opening Locations	• None [X]	
Traffic Lanes on Bridge	• No. of Traffic Lanes: 1 • Width of Median: None • Width of Shoulder, Left: None Right: None	
Approaches	• Approach Slab at: BB [ ] EB [ ] None [X] • No. of Traffic Lanes: 1 • Width of Median: None • Width of Shoulder: None Left: Right: • Width of Sidewalk: None Left: Right: • Railing Type: n/a Left [ ] Right [ ] • Railing Height: n/a Left: Right	

SUBSTRUCTURE AND UNDERSIDE COMPONENTS	DESCRIPTION	CONDITION REMARKS
Abutments Types & Wingwalls	• Abutment Types: Conc, integral with deck • Integral wingwalls [X] and/ or Headwalls: [ ]	Upstream right wingwall concrete poor quality and abraded
Bent n/a	• Materials: • Number of bents: • Pier Wall Type [ ] Column Type [ ] • X-sectional Dimensions: • Skew at Bents:	
Piling	• Not Visible [X] Pile Type: • Pile Extension:	
Abutment and/or Bent Footings	• Footings: Visible [ ] Not Visible [X] • Invert slab: Yes [X] No [ ]	Stepped invert at exit area
Embankment Condition and Erosion Control Measures	The creek embankments at the bridge are stable.	
Road Under the Bridge n/a	• None [ ] • No. of Traffic Lanes: • Width of Median: • Width of Shoulder: Left Right • Width of Sidewalk: Left Right	

MISCELLANEOUS FEATURES	DESCRIPTION	REMARKS
Evidence of Previous Work	[ ] Seismic Retrofit [ ] Rehab & Repairs	
Visible Utilities	• Gas [X] Water [X] Sewer [X] • Electrical [X] Telecommunication [X] • Other Utilities: • Structure Lighting: • Manhole on Deck:	There is a nearby fire hydrant
Availability of Detours	Stage construction	
Drainage Facilities on Structure	• None [X] •	
Drainage Facilities Under Structure	None	
Existing Facilities at Structure	• Retaining Walls: None [ ] Integral [X] Near Abuts [X]	Stacked rock retaining wall upstream connects the bridge to a private bridge
Visual Hydraulic Assessment – Fish Passage	Flow present [X] Fish Spawning Route [ ]	



Photo 3 – Downstream edge of the bridge



Photo 4 – Upstream edge of the bridge



Photo 5 – Upstream of the bridge



Photo 6 – View of downstream side of the bridge



Photo 7 – Poor quality wingwall concrete, further abraded by the flows



Photo 8 – Poor quality arch concrete, further made worse and abraded by swift flows



Photo 9 – Partial check dam downstream

MILL VALLEY STRUCTURE NO. 20

STRUCTURE NO. 20 - CASCADE DRIVE BRIDGE OVER CASCADE CREEK



Photo 1 - Street Level Looking East



Photo 2 - Street Level Looking West

SUMMARY & RECOMMENDATIONS

The Bridge was visually inspected by Nader Tamannaie, PE, on April 1, 2020.

The field notes and photos are recorded in the subsequent pages of this section.

General Observations

Similar to many other bridges over Cascade Creek, the earth-filled solid arch bridge is possibly near a century old. It has unknown foundations. The concrete quality was not the best to begin with and appears lightly reinforced. The bridge has developed severe vertical and horizontal cracks on the downstream edge of its headwall. These are likely caused by age, overloads by heavy trucks, water retention by the earth infill and the ensuing additional weight. These cracks pose serious threat to the bridge's life and serviceability.

The concrete on the inside of the barrel is abraded from years of fast flows, but is not as critical.as the above problem

The pipe barriers are not pedestrian safe..

Structure's Qualitative Health & Serviceability Condition Score (0-100): < 20

Qualitative Estimate of Structure's Safe Remaining Life: <10 years

Recommendations

1. Repair the cracks by tying the two faces of concrete together with high-strength rods throughout and encasing the entire bridge and arch soffit with a 6" thick layer of reinforced concrete (shotcrete method).
2. As an alternative to repairs, replacement of the bridge should be considered.
3. Place steel wire grid to cover the openings in the railings and prevent falls through them.
4. Consider posting truck weight limit signs on the street.

Urgency of Maintenance Needs

The work on the major repairs to the bridge should be top priority. The barrier opening issue should be addressed when the bridge is repaired or otherwise if the barrier needs other intervention.

Approximate Cost of Rehabilitation or Repairs : $154,000

FIELD OBSERVATION NOTES

Observation Date and Time: 4-1-20, 1:30 p.m. Caltrans District: 4 County: Marin

Facility Carried: Cascade Dive Feature Intersected: Cascade Creek Bridge [X] Culvert [ ]

Mill Valley Crossing No: 20 Caltrans Bridge No: _____ Year Built: _____

Total Width: 18' Total Length: 15' No. of Spans (Bridge): 1 No. of Chambers (Culvert): _____

Site Coordinates (Apple iPhone): 37° 54' 23" N & 122° 33' 20" W Weather: Sunny & Clear

Street Posted for: Truck Weight Limit [ ] Speed Limit [ ] Nearest Postal Address::#84 Cascade

SUPERSTRUCTURE AND TOPSIDE COMPONENTS	DESCRIPTION	CONDITION REMARKS
Superstructure Basics	• Structure Type & Materials: Filled Conc Arch • Alignment: Curved [ ] Tangent [X] • Superstructure Depth: 4' at arch apex • Span Lengths: 12' at arch base • Waterway Opening Height: XXX • Skew at Abutments: 15°± • Curb-to-Curb Width: 16' • Expansion Joints: n/a • Culvert ϕ or Dimensions: n/a	The entire downstream side superstructure concrete face is severely cracked. Needs repair. Bridge is adjacent to a timber pedestrian bridge on the damaged side.
Railings, Sidewalks & Curbs	• Railing Type: Steel tubing Left [X] Right [X] • Railing Height: 2'-2" Left [X] Right [X] • Sidewalks on 0 side(s) • Width of Sidewalk: Left: Right: • Curb Height: 0" • Median Barrier: Yes [ ] No: [X]	Railings on the bridge are recently replaced and newly painted. They are substandard and pose fall-through danger because of their openings.
Deck Surface	• AC [X] Concrete [ ] Wood [ ]	
Span Hinges	• None [X]	
Restrainers	At: Abutments [ ] Bents [ ] None [X]	
Soffit Opening Locations	• None [X]	
Traffic Lanes on Bridge	• No. of Traffic Lanes: 1 • Width of Median: • Width of Shoulder, Left: Right:	
Approaches	• Approach Slab at: BB [ ] EB [ ] None [X] • No. of Traffic Lanes 2 narrowing lanes • Width of Median: None • Width of Shoulder: None Left: Right • Width of Sidewalk: None Left: Right • Railing Type: Wood Left [X] Right [X] • Railing Height: Left: 2'± Right: 2'±	

SUBSTRUCTURE AND UNDERSIDE COMPONENTS	DESCRIPTION	CONDITION REMARKS
Abutments Types & Wingwalls	• Abutment Types: Conc • Integral wingwalls [X] and/ or Headwalls: [ ]	There are large cracks @ left abutment and top of arch is delaminated. Needs repair.
Bent	• Materials: • Number of bents: • Pier Wall Type [ ] Column Type [ ] • X-sectional Dimensions: • Skew at Bents:	
Piling	• Not Visible [X] Pile Type: • Pile Extension:	
Abutment and/or Bent Footings	• Footings: Visible [ ] Not Visible [X] • Invert slab: Yes [X] No [ ]	
Embankment Condition and Erosion Control Measures	Embankments are stable	
Road Under the Bridge	• None [X] • No. of Traffic Lanes: • Width of Median: • Width of Shoulder: Left: Right • Width of Sidewalk: Left: Right	

MISCELLANEOUS FEATURES	DESCRIPTION	REMARKS
Evidence of Previous Work	[ ] Seismic Retrofit [ ] Rehab & Repairs	Recent rail replacement or paint
Visible Utilities	• Gas [ ] Water [ ] Sewer [ ] • Electrical [X] Telecommunication [X] • Other Utilities: • Structure Lighting: • Manhole on Deck:	
Availability of Detours	Any work on bridge must be staged. Detours are available.	
Drainage Facilities on Structure	• None [ ] • DI at top left near abutment 1	
Drainage Facilities Under Structure	None	
Existing Facilities at Structure	• Retaining Walls: None [ ] Integral [X] Near Abuts [X]	Long curved retaining wall downstream left is leaning & cracked badly all over
Visual Hydraulic Assessment – Fish Passage	Flow present [X] Fish Spawning Route [ ]	



Photo 3 – View of railings without fall-through prevention and the adjacent pedestrian bridge



Photo 4 – Badly cracked Curved retaining wall on the downstream left side



Photo 5 – View of the arch structure from upstream side



Photo 6 – View through the arch and at the abraded interior concrete



Photo 7 - Vertical crack downstream side of arch at headwall / wingwall



Photo 8 –Crack in downstream side of arch soffit



Photo 9 - Crack in downstream side of arch soffit



Photo 10 – Electrical utility pipes attached on the upstream side of structure



Photo 11 - Evidence of old railing posts in the railing

MILL VALLEY STRUCTURE NO. 21

STRUCTURE NO. 21 - CASCADE DRIVE PEDESTRIAN BRIDGE OVER CASCADE CREEK

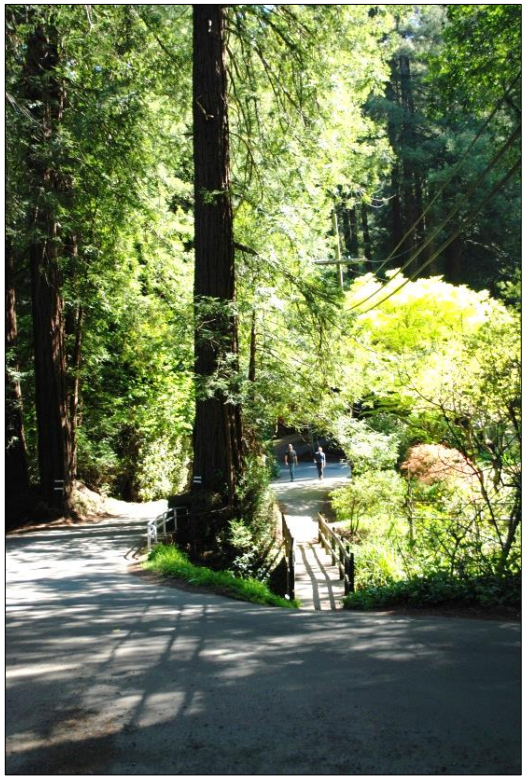

Photo 1 - Street Level Looking East



Photo 2 - Street Level Looking West



Photo 3 – Water utility pipe under the bridge



Photo 4 – Cracks in one column

SUMMARY & RECOMMENDATIONS

The Bridge was visually inspected by Nader Tamannaie, PE, on April 1, 2020.

The field notes and photos are recorded in the subsequent pages of this section.

General Observations

This is a multi-span wooden pedestrian bridge on concrete pile extensions. The age of the pedestrian bridge is unknown. It is generally in fair condition. It appears the deck planks in spans 1 and 2 were replaced recently, but additional dry-rotted planks still exist. The railings on the bridge have too wide openings and do not prevent fall-through. Some of the concrete columns have developed thin cracks.

Structure's Qualitative Health & Serviceability Condition Score (0-100): < 65

Qualitative Estimate of Structure's Safe Remaining Life: <25 years

Recommendations

1. Replace all dry-rotted deck planks.
2. Reduce the size of openings in the railing to 4" or less by use of metal mesh or wood lattice.
3. Monitor the column cracks over time.

Urgency of Maintenance Needs

The dry-rotted wood deck planks should be replaced within a year. The barrier opening size issue should addressed at the same time or in the future if any other railing work is contemplated.

Approximate Cost of Rehabilitation or Repairs : $14,000

FIELD OBSERVATION NOTES

Observation Date and Time: 4-1-20, 2:30 p.m. Caltrans District: 4 County: Marin

Facility Carried: Pedestrian Path Feature Intersected: Cascade Creek Bridge [X] Culvert [ ]

Mill Valley Crossing No: 21 Caltrans Bridge No: _____ Year Built: _____

Total Width: 4' Total Length: 40' No. of Spans (Bridge): 5 No. of Chambers (Culvert): _____

Site Coordinates (Apple iPhone): 37° 54' 23" N & 122° 33' 20" W Weather: Sunny & Clear

Street Posted for: Truck Weight Limit [ ] Speed Limit [ ] Nearest Postal Address: #84 Cascade

SUPERSTRUCTURE AND TOPSIDE COMPONENTS	DESCRIPTION	CONDITION REMARKS
Superstructure Basics	• Structure Type & Materials: Wood on Conc Piles • Alignment: Curved [ ] Tangent [X] • Superstructure Depth: 10" (10 X 4 wood beams) • Span Lengths: 5.5' - 7.5' - 15' - 7' - 5' • Waterway Opening Height: 6' • Skew at Abutments: 0° • Curb-to-Curb Width: n/a • Expansion Joints: n/a • Culvert ϕ or Dimensions: n/a	Deck planks in spans 1 and 2 replaced. More planks need to be replaced.
Railings, Sidewalks & Curbs	• Railing Type: Wood Left [X] Right [X] • Railing Height: 3' Left [X] Right [X] • Sidewalks on 0 side(s) • Width of Sidewalk: Left: Right: • Curb Height: n/a • Median Barrier: Yes [ ] No [X]	Railings on the bridge substandard and pose fall-through danger because of their openings.
Deck Surface	• AC [ ] Concrete [ ] Wood [X]	
Span Hinges	• None [X]	
Restrainers	At: Abutments [ ] Bents [ ] None [X]	
Soffit Opening Locations	• None [X]	
Traffic Lanes on Bridge	• No. of Traffic Lanes: Pedestrians only • Width of Median: n/a • Width of Shoulder, Left: Right:	
Approaches	• Approach Slab at: BB [ ] EB [ ] None [X] • No. of Traffic Lanes • Width of Median: • Width of Shoulder: None Left: Right: • Width of Sidewalk: None Left: Right: • Railing Type: Left [ ] Right [ ] • Railing Height: Left: Right:	

SUBSTRUCTURE AND UNDERSIDE COMPONENTS	DESCRIPTION	CONDITION REMARKS
Abutments Types & Wingwalls	• Abutment Types: Not visible • Integral wingwalls ☐ and/ or Headwalls: ☐	Abutment is likely concrete beam on grade
Bent	• Materials: Concrete • Number of bents: 3 • Pier Wall Type ☐ Column Type ☒ • X-sectional Dimensions: 12" diameter • Skew at Bents:	Downstream pile extension at bent 3 is cracked and should be wrapped
Piling	• Not Visible ☐ Pile Type: 24" CIDH • Pile Extension: 12" columns on 24" piles	CIDH: Cast-In-Drilled-Hole
Abutment and/or Bent Footings n/a	• Footings: Visible ☐ Not Visible ☒ • Invert slab: Yes ☐ No ☒	
Embankment Condition and Erosion Control Measures	Overgrown foliage with some erosion	
Road Under the Bridge	• None ☐ • No. of Traffic Lanes: • Width of Median: • Width of Shoulder: Left: Right • Width of Sidewalk: Left: Right	n/a

MISCELLANEOUS FEATURES	DESCRIPTION	REMARKS
Evidence of Previous Work	☐ Seismic Retrofit ☒ Rehab & Repairs	Spans 1 and 2 deck planks replaced recently
Visible Utilities	• Gas ☐ Water ☒ Sewer ☐ • Electrical ☒ Telecommunication ☐ • Other Utilities: • Structure Lighting: • Manhole on Deck:	
Availability of Detours	Pedestrians and bikes may use the adjacent auto bridge during repairs	
Drainage Facilities on Structure	• None ☒ •	
Drainage Facilities Under Structure	None	
Existing Facilities at Structure	• Retaining Walls: None ☐ Integral ☐ Near Abuts ☐	Adjacent to vehicular bridge No. 20
Visual Hydraulic Assessment – Fish Passage	Flow present ☒ Fish Spawning Route ☐	



Photo 5 – View of the pedestrian bridge from the adjacent vehicular bridge



Photo 6 – Profile view of the pedestrian bridge with the vehicular bridge in the back



Photo 7 – Deck planks with dry rot



Photo 8 – View showing deteriorated planks

MILL VALLEY STRUCTURE NO. 22

STRUCTURE NO. 22 - CASCADE WAY BRIDGE OVER CASCADE CREEK



Photo 1 - Street Level Looking East



Photo 2 - Street Level Looking West

SUMMARY & RECOMMENDATIONS

The Bridge was visually inspected by Nader Tamannaie, PE, on April 1, 2020.

The field notes and photos are recorded in the subsequent pages of this section.

General Observations

1. The bridge, an earth-filled solid arch, is possibly near a century old. The concrete quality was not the best to begin with and appears lightly reinforced. The bridge is on unknown foundations and has developed severe vertical and angled cracks on both headwalls. These are likely caused by age, poor quality concrete, overloads by heavy trucks, water retention by the earth infill and the ensuing additional weight. These cracks pose serious threat to the bridge's life and serviceability.
2. The concrete on the inside of the barrel is abraded from years of fast flows, but is not as critical.as the headwall deterioration.
3. The pipe barrier rails are not pedestrian safe.

Structure's Qualitative Health & Serviceability Condition Score (0-100): < 20

Qualitative Estimate of Structure's Safe Remaining Life: <10 years

Recommendations

1. Repair the cracks by tying the two faces of concrete together with high-strength rods throughout and encasing the entire bridge and arch soffit with a 6" thick layer of reinforced concrete (shotcrete method).
2. As an alternative to repairs, replacement of the bridge should be considered.
3. Place steel wire grid to cover the openings in the railings and prevent falls through them.
4. Consider posting truck weight limit signs on the street.

Urgency of Maintenance Needs

The work on all above repairs to the bridge should be top priority.

Approximate Cost of Rehabilitation or Repairs : $140,000

FIELD OBSERVATION NOTES

Observation Date and Time: 4-1-20, 4:00 p.m. Caltrans District: 4 County: Marin

Facility Carried: Cascade Way Feature Intersected: Cascade Creek Bridge [X] Culvert [ ]

Mill Valley Crossing No: 22 Caltrans Bridge No: _____ Year Built: _____

Total Width: 18' Total Length: 12' No. of Spans (Bridge): 1 No. of Chambers (Culvert): _____

Site Coordinates (Apple iPhone): 37° 54' 18" N & 122° 33' 13" W Weather: Sunny & Clear

Street Posted for: Truck Weight Limit [ ] Speed Limit [ ] Nearest Postal Address::Old Mill Park

SUPERSTRUCTURE AND TOPSIDE COMPONENTS	DESCRIPTION	CONDITION REMARKS
Superstructure Basics	• Structure Type & Materials: Filled Concrete Arch • Alignment: Curved [ ] Tangent [X] • Superstructure Depth: 4' at arch apex • Span Lengths: 12'(@arch base) • Waterway Opening Height: 8.5'± • Skew at Abutments: 0° • Curb-to-Curb Width: 16' • Expansion Joints: n/a • Culvert ϕ or Dimensions: n/a	There are severe extensive and wide cracks on both sides of bridge face. Not much reinforcement can be seen.
Railings, Sidewalks & Curbs	• Railing Type: Steel tubing Left [X] Right [X] • Railing Height: 2'-2" Left [X] Right [X] • Sidewalks on 0 side(s) • Width of Sidewalk: Left: Right: • Curb Height: 4" • Median Barrier: Yes [ ] No: [X]	Railings on the bridge are substandard and pose fall-through danger because of their openings.
Deck Surface	• AC [X] Concrete [ ] Wood [ ]	
Span Hinges	• None [X]	
Restrainers	At: Abutments [ ] Bents [ ] None [X]	
Soffit Opening Locations	• None [X]	
Traffic Lanes on Bridge	• No. of Traffic Lanes: 2 narrow lanes • Width of Median: • Width of Shoulder, Left: Right:	
Approaches	• Approach Slab at: BB [ ] EB [ ] None [X] • No. of Traffic Lanes 2 narrow lanes • Width of Median: None • Width of Shoulder: None Left: Right • Width of Sidewalk: None Left: Right • Railing Type: Wood Left [X] Right [X] • Railing Height: Left: 2'± Right: 2'±	

SUBSTRUCTURE AND UNDERSIDE COMPONENTS	DESCRIPTION	CONDITION REMARKS
Abutments Types & Wingwalls	• Abutment Types: Conc • Integral wingwalls [X] and/ or Headwalls: [ ]	
Bent	• Materials: • Number of bents: • Pier Wall Type [ ] Column Type [ ] • X-sectional Dimensions: • Skew at Bents:	
Piling	• Not Visible [X] Pile Type: • Pile Extension:	
Abutment and/or Bent Footings	• Footings: Visible [ ] Not Visible [X] • Invert slab: Yes [X] No [ ]	Invert appears to have split in two halves at the entry upstream
Embankment Condition and Erosion Control Measures	Rock riprap at three bridge quadrants and stacked conc sack at one	
Road Under the Bridge	• None [X] • No. of Traffic Lanes: • Width of Median: • Width of Shoulder: Left: Right • Width of Sidewalk: Left: Right	

MISCELLANEOUS FEATURES	DESCRIPTION	REMARKS
Evidence of Previous Work	[ ] Seismic Retrofit [ ] Rehab & Repairs	Recent approach rail replacement, and bridge rail repair and paint
Visible Utilities	• Gas [ ] Water [ ] Sewer [ ] • Electrical [X] Telecommunication [ ] • Other Utilities: • Structure Lighting: • Manhole on Deck:	
Availability of Detours	Detour possible	
Drainage Facilities on Structure	• None [X] •	
Drainage Facilities Under Structure	RCP daylighting thru the curved retaining wall near the bridge.	
Existing Facilities at Structure	• Retaining Walls: None [ ] Integral [ ] Near Abuts [X]	Pedestrian bridge and city park at the bridge
Visual Hydraulic Assessment – Fish Passage	Flow present [X] Fish Spawning Route [ ]	



Photo 3 – View of substandard railings without fall-through prevention



Photo 4 – Approach road railing looking west



Photo 5 – Bridge superstructure crack at upstream edge of the arch



Photo 6 – Long vertical bridge superstructure crack downstream edge



Photo 7 - Horizontal upstream crack above the arch & delamination at wingwall



Photo 8 – Close-up of arch wall abrasion



Photo 9 – Historic scour pool at outlet, rock riprap at base of right embankment



Photo 10 – Sacked cement riprap upstream right side



Photo 11 – Overall view of upstream headwall crack



Photo 12 – Close-up of upstream headwall crack

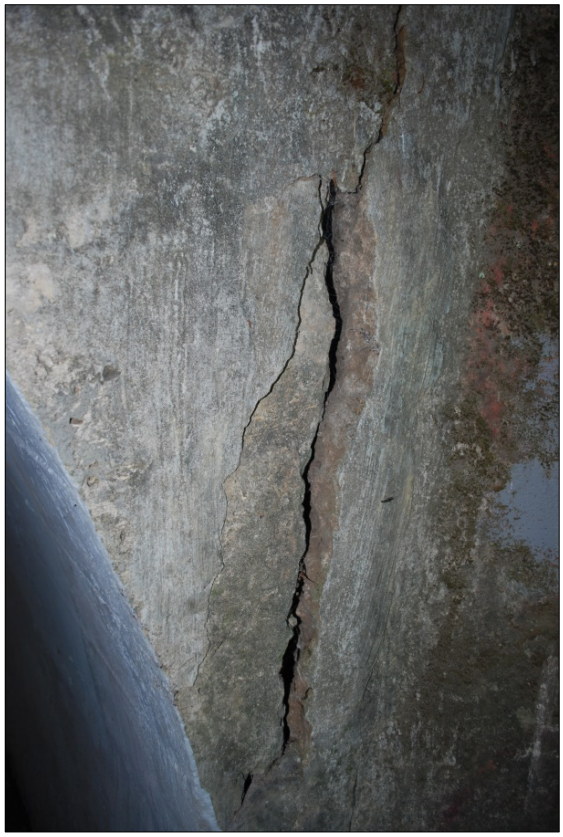

Photo 13 – Close-up of upstream headwall crack



Photo 14 – Steel tube railing

MILL VALLEY STRUCTURE NO. 23

STRUCTURE NO. 23 - CASCADE WAY PEDESTRIAN BRIDGE OVER CASCADE CREEK



Photo 1 - Street Level Looking East



Photo 2 - Street Level Looking West

SUMMARY & RECOMMENDATIONS

The Bridge was visually inspected by Nader Tamannaie, PE, on April 28, 2020.

The field notes and photos are recorded in the subsequent pages of this section.

General Observations

The multi-span crossing, a primarily wooden pedestrian bridge, is not as old as the vehicular bridge next to it, but a clear date of its construction is not available. It has two primary wood stringers in each of its two end spans, and two steel beams for its longer interior span. It has a wood deck and railings, and sees plenty of foot traffic since its next to a popular park, as well as on a busy route. It appears the bridge grounds are a popular spot, since it casts shade over a wide, natural pool in the creek, used for recreation.

The bridge is primarily in good condition. In the field observations signs of wood fungus accumulating on the deck planks were noticed, which should be paid attention to. The other wood members appear wholesome.

Structure's Qualitative Health & Serviceability Condition Score (0-100): < 75

Qualitative Estimate of Structure's Safe Remaining Life: < 30 years

Recommendations

1. The deck planks should be inspected in detail for dry rot and any decayed wood should be replaced
2. City maintenance crew should keep an eye on erosion around the bridge abutments due to foot traffic and the flows from an 18" ϕ RCP, daylighting on top of the slope near the north bridge abutment.
3. Moss and other plant growth, appearing on wood railings or elsewhere, should be removed, as these would promote wood decay.

Urgency of Maintenance Needs

The detailed dry-rot inspection should take place in the next 2-3 years, at the latest.

Approximate Cost of Rehabilitation or Repairs: 21,000

FIELD OBSERVATION NOTES

Observation Date and Time: 4-28-20, 9:30 a.m. Caltrans District: 4 County: Marin

Facility Carried: Cascade Way Ped Path Feature Intersected: Cascade Creek Bridge [X] Culvert [ ]

Mill Valley Crossing No: 23 Caltrans Bridge No: _____ Year Built: _____

Total Width: 4'-6" Total Length: 64' No. of Spans (Bridge): 3 No. of Chambers (Culvert): _____

Site Coordinates (Apple iPhone): 37° 54' 18" N & 122° 33' 14" W Weather: Sunny & Clear

Street Posted for: Truck Weight Limit [ ] Speed Limit [ ] Nearest Postal Address: Old Mill Park

SUPERSTRUCTURE AND TOPSIDE COMPONENTS	DESCRIPTION	CONDITION REMARKS
Superstructure Basics	• Structure Type & Materials: Wood & Steel Beam Stringer Pedestrian Bridge • Alignment: Curved [ ] Tangent [X] • Superstructure Depth: 18", decking included • Span Lengths: 17' – 30' – 17' • Waterway Opening Height: 12'± • Skew at Abutments: 0° • Curb-to-Curb Width: 47" • Expansion Joints: n/a • Culvert ϕ or Dimensions: n/a	The multi-span bridge has wood for its two shorter outer spans and steel beams for the longer interior span. Main stringers are 12 x 4 wood and12" steel stringers. Early signs of fungus and wood rot in the deck planking may be present
Railings, Sidewalks & Curbs	• Railing Type: Wood Left [X] Right [X] • Railing Height: 3'-6" Left [X] Right [X] • Sidewalks on 0 side(s) • Width of Sidewalk: Left: Right: • Curb Height: 4" • Median Barrier: Yes [ ] No: [X]	Rail posts at 4' OC
Deck Surface	• AC [ ] Concrete [ ] Wood [X]	
Span Hinges	• None [X]	
Restrainers	At: Abutments [ ] Bents [ ] None [X]	
Soffit Opening Locations	• None [X]	
Traffic Lanes on Bridge	• No. of Traffic Lanes: Foot traffic only • Width of Median: • Width of Shoulder, Left: Right:	
Approaches	• Approach Slab at: BB [ ] EB [ ] None [X] • No. of Traffic Lanes:: Peds only • Width of Median: None • Width of Shoulder: None Left: Right • Width of Sidewalk: None Left: Right • Railing Type: Wood Left [X] Right [X] • Railing Height: Left: 2'± Right: 2'±	

SUBSTRUCTURE AND UNDERSIDE COMPONENTS	DESCRIPTION	CONDITION REMARKS
Abutments Types & Wingwalls	• Abutment Types: Concrete • Integral wingwalls [X] and/ or Headwalls: [ ]	
Bent	• Materials: Round wood piles (2/bent) • Number of bents: 2 • Pier Wall Type [ ] Column Type [X] • X-sectional Dimensions:12" ϕ • Skew at Bents:	
Piling	• Not Visible [ ] Pile Type: Wood • Pile Extension: Wood	Piles are capped with transverse 12 x 12 beams
Abutment and/or Bent Footings	• Footings: Visible [ ] Not Visible [X] • Invert slab: Yes [ ] No [X]	Adjacent vehicular bridge has an invert. Under the ped bridge is a large pool-like opening
Embankment Condition and Erosion Control Measures	Some erosion due to foot traffic around the bridge embankments	
Road Under the Bridge	• None [X] • No. of Traffic Lanes: • Width of Median: • Width of Shoulder: Left: Right • Width of Sidewalk: Left: Right	

MISCELLANEOUS FEATURES	DESCRIPTION	REMARKS
Evidence of Previous Work	[ ] Seismic Retrofit [ ] Rehab & Repairs	
Visible Utilities	• Gas [ ] Water [ ] Sewer [ ] • Electrical [X] Telecommunication [ ] • Other Utilities: • Structure Lighting: • Manhole on Deck:	
Availability of Detours	Detour possible	
Drainage Facilities on Structure	• None [X] •	
Drainage Facilities Under Structure	18" RCP (lined with plastic pie) discharge parallel to bridge down the embankment.	Flow path is mostly rock-lined but some erosion is present
Existing Facilities at Structure	• Retaining Walls: None [ ] Integral [ ] Near Abuts [ ]	Vehicular bridge and city park at the bridge
Visual Hydraulic Assessment – Fish Passage	Flow present [X] Fish Spawning Route [X]	



Photo 3 – Profile view of the bridge on the opposite side from vehicular bridge



Photo 4 – Simple roundabout at the north approach to the bridge



Photo 5 – North approach to the pedestrian bridge



Photo 6 – South approach to the pedestrian bridge



Photo 7 – Beginnings of fungus on the deck planks



Photo 8 – Moss growth on top of the vertical railing wood members



Photo 9 – The adjacent vehicular bridge and open creek area under pedestrian bridge



Photo 10 – Heavy riprap at bent support, as well as an 18” RCP outlet near north abutment



Photo 11 – View of north bridge abutment



Photo 12 – View of the interior of the south bridge abutment



Photo 13 – Signs of fish in the creek



Photo 14 – Wood sawmill replica attraction in the adjacent park

MILL VALLEY STRUCTURE NO. 24

STRUCTURE NO. 24 – ETHEL AVENUE BRIDGE OVER CASCADE CREEK



Photo 1 - Street Level Looking East



Photo 2 - Street Level Looking West

SUMMARY & RECOMMENDATIONS

The Bridge was visually inspected by Nader Tamannaie, PE, on April 28, 2020.

The field notes and photos are recorded in the subsequent pages of this section.

General Observations

The bridge, an earth-filled concrete arch, is 80-100 years old and tightly nestled in the neighborhood. It is of unknown foundations. The arch headwalls are badly and extensively cracked and areas of the archway exposed to the flows are badly abraded. The extensive distress is due to poor quality original concrete, age, old design and construction technologies, and impactful flows.

Scour is present under the wingwalls, mainly downstream

The wood railings are too low and substandard.

Structure's Qualitative Health & Serviceability Condition Score (0-100): < 10

Qualitative Estimate of Structure's Safe Remaining Life: < 10 years

Recommendations

1. Connect the headwalls with high strength rebar through the earth fill and anchor each bar at the headwalls. Place epoxied dowels in the all exposed concrete surfaces, a mat of reinforcement over the surfaces and a 6" layer of reinforced shotcrete over the entire bridge concrete surfaces (except the deck). This will reduce the flow area and its hydraulic impacts should be investigated. Such repairs as those described above will add life to the structure, but the best and most permanent solution would be bridge replacement.
2. Place rock riprap under and in front of the scoured wingwall bases.
3. Replace or augment the railings for safety of pedestrians and bike users.

Urgency of Maintenance Needs

The repairs (or replacement) recommended are urgent and should be top priority.

Approximate Cost of Rehabilitation or Repairs : $168,000

FIELD OBSERVATION NOTES

Observation Date and Time: 4-28-20, 10:30 a.m. Caltrans District: 4 County: Marin

Facility Carried: Ethel Avenue Feature Intersected: Cascade Creek Bridge [X] Culvert [ ]

Mill Valley Crossing No: 24 Caltrans Bridge No: _____ Year Built: _____

Total Width: 18' Total Length: 13' No. of Spans (Bridge): 1 No. of Chambers (Culvert): _____

Site Coordinates (Apple iPhone): 37° 54' 17" N & 122° 33' 03" W Weather: Sunny & Clear

Street Posted for: Truck Weight Limit [ ] Speed Limit [ ] Nearest Postal Address: #11 Ethel

SUPERSTRUCTURE AND TOPSIDE COMPONENTS	DESCRIPTION	CONDITION REMARKS
Superstructure Basics	• Structure Type & Materials: Earth-Filled Concrete Arch • Alignment: Curved [ ] Tangent [X] • Superstructure Depth: 4' min and varies • Span Lengths: 10' • Waterway Opening Height: 9'± • Skew at Abutments: 0° • Curb-to-Curb Width: 16' • Expansion Joints: n/a • Culvert ϕ or Dimensions: n/a	The main structure is badly cracked and critical. Concrete is highly strained and, where cracked or spalled, no reinforcement or very little of can be seen.
Railings, Sidewalks & Curbs	• Railing Type: Wood Left [X] Right [X] • Railing Height: 2'-6" Left [X] Right [X] • Sidewalks on 0 side(s) • Width of Sidewalk: Left: Right: • Curb Height: 2" min and varies • Median Barrier: Yes [ ] No: [X]	Rail posts at 4' OC
Deck Surface	• AC [X] Concrete [ ] Wood [ ]	
Span Hinges	• None [X]	
Restrainers	At: Abutments [ ] Bents [ ] None [X]	
Soffit Opening Locations	• None [X]	
Traffic Lanes on Bridge	• No. of Traffic Lanes: 1 • Width of Median: • Width of Shoulder, Left: Right:	
Approaches	• Approach Slab at: BB [ ] EB [ ] None [X] • No. of Traffic Lanes: 1 • Width of Median: None • Width of Shoulder: None Left: Right • Width of Sidewalk: None Left: Right • Railing Type: None Left [ ] Right [ ] • Railing Height: Left Right:	

SUBSTRUCTURE AND UNDERSIDE COMPONENTS	DESCRIPTION	CONDITION REMARKS
Abutments Types & Wingwalls	• Abutment Types: Concrete • Integral wingwalls [X] and/ or Headwalls: [X]	Stone retaining wall, upstream right
Bent	• Materials: • Number of bents: • Pier Wall Type [ ] Column Type [ ] • X-sectional Dimensions: • Skew at Bents:	n/a
Piling	• Not Visible [X] Pile Type: • Pile Extension:	
Abutment and/or Bent Footings	• Footings: Visible [ ] Not Visible [X] • Invert slab: Yes [X] No [ ]	
Embankment Condition and Erosion Control Measures	Bank slopes are steep and erosion is problematic	
Road Under the Bridge	• None [X] • No. of Traffic Lanes: • Width of Median: • Width of Shoulder: Left: Right • Width of Sidewalk: Left: Right	

MISCELLANEOUS FEATURES	DESCRIPTION	REMARKS
Evidence of Previous Work	[ ] Seismic Retrofit [ ] Rehab & Repairs	Recent approach rail (wood) repair. Concrete at the entry edge of the arch has receive minor repair in the past.
Visible Utilities	• Gas [X] Water [ ] Sewer [ ] • Electrical [X] Telecommunication [X] • Other Utilities: • Structure Lighting: • Manhole on Deck:	
Availability of Detours	Detour possible	
Drainage Facilities on Structure	• None [ ] •	Scupper at upstream edge of the bridge. Drainage ditch runs on top of adjacent bank
Drainage Facilities Under Structure	An RCP drains in the creek through the retaining wall downstream	
Existing Facilities at Structure	• Retaining Walls: None [ ] Integral [X] Near Abuts [X]	
Visual Hydraulic Assessment – Fish Passage	Flow present [X] Fish Spawning Route [ ]	



Photo 3 – View from upstream side



Photo 4 – Downstream view of the bridge



Photo 5 – Very badly abraded and delaminated concrete at the base of the arch

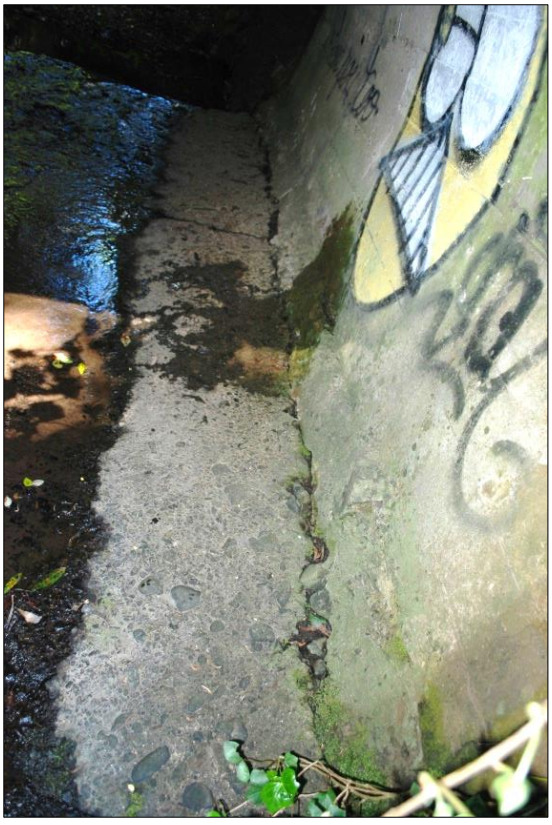

Photo 6 – Full-length crack at the base of the arch on the opposite side



Photo 7 – Full-height vertical crack of arch soffit at the headwall, continuing all the way to invert



Photo 8 – Another full-height vertical crack of arch soffit at the headwall at another arch edge



Photo 9 – Full-height vertical crack of arch soffit interior



Photo 10 – Details of deep and wide cracks in the arch soffit areas



Photo 11 – Extensive scour effects at the base and edge of the arch and corner



Photo 12 – Scour under downstream wingwall



Photo 13 - Concrete delamination and long, wide horizontal crack at headwall are evident



Photo 14 – Scour pool downstream



Photo 15 - Details of spall and unsound concrete



Photo 16 – More evidence of bottom of wall concrete distress and scour

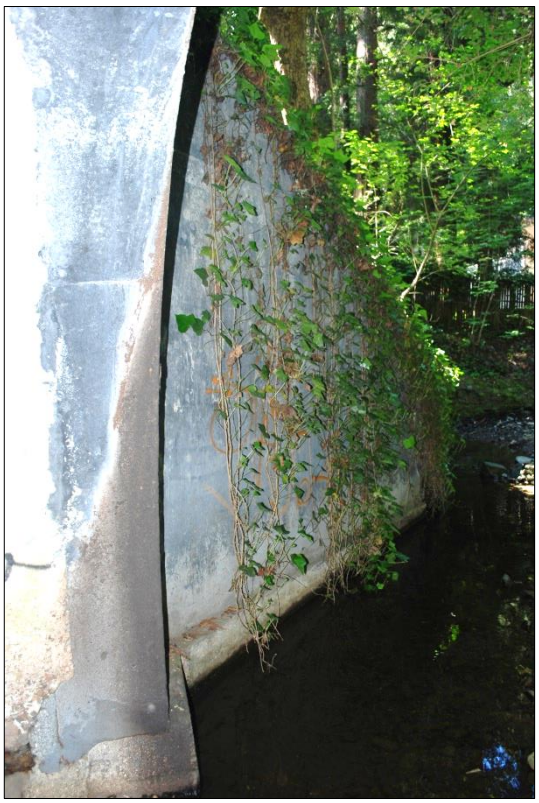

Photo 17 – Evidence or repairs



Photo 18 – Sacked cement riprap downstream



Photo 19 – Drain outlet downstream



Photo 20 – Drainage on top near the bridge



Photo 21 – Scupper through the curb on the edge of deck at top

MILL VALLEY STRUCTURE NO. 25

STRUCTURE NO. 25 – MILLER AVENUE & BUILDINGS OVER CASCADE CREEK



Photo 1 – Looking upstream along the culvert's alignment (from the stone wall to DI & beyond)



Photo 2 - Looking downstream along the alignment (from DI to blue-shirted pedestrian & beyond)

SUMMARY & RECOMMENDATIONS

The Bridge was visually inspected by Nader Tamannaie, PE, on June 27, 2020.

The field notes and photos are recorded in the subsequent pages of this section.

General Observations

This is the site of a multi-generational construction of attached structures (at least four) under Miller Avenue and the commercial properties on both sides of it. The end-to-end structures change from 7' RCP at inlet to slab bridge, to filled arch and, lastly, to 7' RCP again at the outlet. The original construction of the Miller Avenue segments, a filled concrete arch and a slab bridge on concrete abutments, may easily go back over 80 years, with more recent additions of 7' diameter RCPs at each end. The bridge segments are of unknown foundations, but all have a continuous invert slab. The RCP segments at both ends are each series of 4' rings mortared together. The last segment of RCP's outlet ends up at the same location the RCP through which Arroyo Corte Madera flows and ends (Mill Valley Structure No. 45), constituting the confluence of this creek and Cascade creek.

The original structures, the attached slab and filled arch bridges, are in less than ideal condition because of their age, but the RCP segments are in much better shape. There are sections of poor quality original concrete, abraded walls, spalled concrete exposing rusty rebar, and cracks. At the outlet, the confluence location of the two creeks, the wingwalls and retaining walls are of inferior material quality and badly scoured under, as much as 3'-4' horizontally and one foot vertically.

The division of public and private ownership of these facilities should be investigated and verified.

Structure's Qualitative Health & Serviceability Condition Score (0-100): < 40

Qualitative Estimate of Structure's Safe Remaining Life: < 20 years

Recommendations

1. The entire interior circumference of the filled arch and slab sections should be lined with 6 inches of reinforced shotcrete, including the wingwall/retaining walls at the outlet location. Replace the stacked of solidified concrete sacks at the right side of outlet area with conventional (or alternative type) structural walls.
2. Repair the scour pockets under the wingwalls/retaining walls at the outlet and protect with rock riprap.
3. Torch off the rebars, piercing hazards to maintenance works and others, protruding out of the walls opposite of each other at the transition from slab bridge to filled arch bridge. This will also stop the trapping of suspended drift in the flows that reduces the waterway opening.
4. Clear the plugged storm pipes daylighting in the slab bridge segment and other plugged pipes

Urgency of Maintenance Needs

All recommended actions above are urgent. Recommendations 3 and 4 should be performed by maintenance crews soon and the first two repair actions should be scheduled for the next 2-5 years.

Approximate Cost of Rehabilitation or Repairs : $210,000

FIELD OBSERVATION NOTES

Observation Date and Time: 6-27-20, 11:45 a.m. Caltrans District: 4 County: Marin

Facility Carried: Miller Ave & Buildings Feature Intersected: Cascade Creek Bridge [X] Culvert [X]

Mill Valley Crossing No: 25 Caltrans Bridge No: _____ Year Built: _____

Total Width: 7'-10" Total Length: 270'± No. of Spans (Bridge): 1 No. of Chambers (Culvert): 1

Site Coordinates (Apple iPhone): 37° 54' 19" N & 1227° 32' 52" W Weather: Cloudy

Street Posted for: Truck Weight Limit [ ] Speed Limit [ ] Nearest Postal Address: # 34 Miller

SUPERSTRUCTURE AND TOPSIDE COMPONENTS	DESCRIPTION	CONDITION REMARKS
Superstructure Basics	• Structural Type & Materials: RCP, Concrete Slab Bridge and Filled Arch Bridge • Alignment: Curved [X] Tangent [ ] • Superstructure Depth: 18" (slab section) • Span Lengths: 10'± (in bridge sections) • Waterway Opening Height: 7' • Skew at Abutments: 0° • Curb-to-Curb Width: 74'± max and Varies • Expansion Joints: • Culvert ϕ or Dimensions: 7' RCPs	The end-to-end structures change from 7' RCP at inlet to slab bridge, to filled arch and, lastly, to 7' RCP at the outlet again. The RCP segments are each a series of 4' rings joined together with mortar. The outlet is at the confluence of Cascade Creek and Arroyo Corte Madera Del Presidio.
Railings, Sidewalks & Curbs	• Railing Type: None Left Right • Railing Height: Left Right • Sidewalks on 1 side(s) • Width of Sidewalk: Left: 11' & var. Right: 6' • Curb Height: 6" • Median Barrier: Yes [ ] No: [X]	All on Miller Avenue
Deck Surface	• AC [X] Concrete [X] Wood [ ]	AC is in good condition
Span Hinges	• None [X]	
Restrainers	At: Abutments [ ] Bents [ ] None [X]	
Soffit Opening Locations	• None [ ] Multiple DIs	
Traffic Lanes on Bridge	• No. of Traffic Lanes: 2 • Width of Median: 24' (Parking) • Width of Shoulder, Left: Right:	Parallel parking northbound & and diagonal Parking southbound
Approaches	• Approach Slab at: BB [ ] EB [ ] None [X] • No. of Traffic Lanes: 2 • Width of Median: 24'± • Width of Shoulder: Left: 8' Right: 16' • Width of Sidewalk: Left: 6' Right: 6' • Railing Type: None Left: Right • Railing Height: Left: Right	All on Miller Ave Parallel parking northbound & and diagonal Parking southbound

SUBSTRUCTURE AND UNDERSIDE COMPONENTS	DESCRIPTION	CONDITION REMARKS
Abutments Types & Wingwalls	• Abutment Types: Concrete at both ends • Integral wingwalls [X] and/ or Headwalls [X]	
Bent	• Materials: • Number of bents: • Pier Wall Type [ ] Column Type [ ] • X-sectional Dimensions: • Skew at Bents:	n/a
Piling	• Not Visible [X] Pile Type: • Pile Extension:	
Abutment and/or Bent Footings	• Footings: Visible [ ] Not Visible [X] • Invert slab: Yes [X] No [ ]	
Embankment Condition and Erosion Control Measures	Considerable scour at outlet, embankments are stable, held back with retaining walls and solidified stacks of sacks of concrete	
Road Under the Bridge	• None [X] • No. of Traffic Lanes: • Width of Median: • Width of Shoulder: Left: Right • Width of Sidewalk: Left: Right	

MISCELLANEOUS FEATURES	DESCRIPTION	REMARKS
Evidence of Previous Work		
Visible Utilities	• Gas [X] Water [X] Sewer [X] • Electrical [X] Telecommunication [X] • Other Utilities: • Structure Lighting: • Manhole on Deck:	Many utilities cross the structures, many of them the same kind but in multiple locations.
Availability of Detours	Available	
Drainage Facilities on Structure	• None [ ] • Multiple DIs	
Drainage Facilities Under Structure	Multiple storm drain outlets	
Existing Facilities at Structure	• Retaining Walls: None [ ] Integral [X] Near Abuts [X]	Street and shops above deck
Visual Hydraulic Assessment – Fish Passage	Flow present [X] Fish Spawning Route [X]	Juvenile fish observed at the outlet pool



Photo 3 – Culvert's inlet in the parking lot



Photo 4 – Looking upstream from culvert's inlet at Structure No. 26



Photo 5 – Looking through the 7’ ϕ RCP from the inlet area



Photo 6 – Point of structure type change from RCP to a slab bridge



Photo 7 – Abrasion & deterioration of poor quality abutment wall concrete in slab bridge section



Photo 8 – View downstream from the slab section



Photo 9 – Street DI in the slab section



Photo 10 – Another street DI in the slab section



Photo 11 – Multiple ducts, cased ducts and utility pipes crossing the slab section



Photo 12 – Cased utility pipes. Note abutment wall abrasion and slab concrete chemical leaching



Photo 13 – Plugged storm drain outlet daylighting in the slab section



Photo 14 – Poor slab concrete quality



Photo 15 – View through the slab section



Photo 16 – Another surface DI and utility pipe in filled arch section



Photo 17 – Structure change from slab bridge to filled concrete arch. Note wall base abrasion



Photo 18 – Location of structure type change



Photo 19 – Poor ceiling concrete quality



Photo 20 – View through the filled arch section



Photo 21 – Hazardous protrusion of rebar at slab to arch transition, right side trapping drift



Photo 22 – Rebar protrusion on left side, similar to above. Also, note wall abrasion.



Photo 23 – Point of change from slab to arch



Photo 24 – Another structural section change, back to 7' ϕ RCP near the end of structure



Photo 25 – RCP outlet (left) and point of confluence of Cascade Creek and Arroyo Corte Madera



Photo 26 – Extreme scour under the left wingwall at RCP outlets



Photo 27 – More detailed view of let wingwall scour at outlet



Photo 28 – Poor right wingwall concrete quality at outlet



Photo 29 – View downstream of the two RCPs outlets. Note the scouring of the retaining walls.



Photo 30 – View of the outlets and the retaining walls downstream



Photo 31 – View downstream of right retaining wall and solidified concrete sack fortification



Photo 32 – Cracked headwall at outlet of the two RCPs



Photo 33 – Well monitoring marker on commercial property's driveway off Miller Avenue



Photo 34 – Overall view of most of the alignment of chain of underground structures

MILL VALLEY STRUCTURE NO. 26

STRUCTURE NO. 26 – MILLER LANE AND BUILDINGS OVER CASCADE CREEK



Photo 1 – Street Level Looking West



Photo 2 – Street Level Looking East

SUMMARY & RECOMMENDATIONS

The Bridge was visually inspected by Nader Tamannaie, PE, on June 27, 2020.

The field notes and photos are recorded in the subsequent pages of this section.

General Observations

This is the site of a multi-generational construction of attached structures (at least three) under Miller Lane and the commercial properties on both sides of it. The end-to-end structures change from 7' RCP at inlet to a two-generational slab bridge and its extension on concrete walls. The original construction of the slab on walls, may easily go a back over 80 years, with more recent additions of 7' diameter RCPs at the north end. The bridge segment is of unknown foundations. The RCP segment at the north end is series of rings mortared-together.

The original structure, the slab bridge is in fair condition, except for a circumferential crack midway, but the RCP segment is in good condition. The retaining walls following the slab segment take a 90° right after the structure and continue as new retaining walls to another set of back-to-back structures, No. 26 in Mill Valley inventory. This segment appears to new and has likely been engineered and permitted by the City.

The division of public and private ownership of these facilities should be investigated and verified.

Structure's Qualitative Health & Serviceability Condition Score (0-100): < 60

Qualitative Estimate of Structure's Safe Remaining Life: < 40 years

Recommendations

1. This structure or a portion of it, as well a sthe leading retaining walls, may not belong to the City. The owner and responsible party must be determined first.

2. The cause of the crack in the slab and wall bridge section must be investigated and addressed.

3. The scour, erosion and failure at the lerading retaing walls need to be addressed.

Urgency of Maintenance Needs

All recommended actions above are urgent and should be scheduled for the next 2-5 years.

Approximate Cost of Rehabilitation or Repairs: $60,000

FIELD OBSERVATION NOTES

Observation Date and Time: 6-27-20, 10:15 a.m. Caltrans District: 4 County: Marin

Facility Carried: Miller Lane/ Buildings Feature Intersected: Cascade Creek Bridge [X] Culvert [X]

Mill Valley Crossing No: 26 Caltrans Bridge No: _____ Year Built: _____

Total Width: 7' – 9' Total Length: 95'± No. of Spans (Bridge): 1 No. of Chambers (Culvert): 1

Site Coordinates (Apple iPhone): 37° 54' 19" N & 1227° 32' 53" W Weather: Cloudy

Street Posted for: Truck Weight Limit [ ] Speed Limit [ ] Nearest Postal Address: # 34 Miller

SUPERSTRUCTURE AND TOPSIDE COMPONENTS	DESCRIPTION	CONDITION REMARKS
Superstructure Basics	• Structural Type & Materials: RCP and Concrete Slab Bridge • Alignment: Curved [ ] Tangent [X] • Superstructure Depth:16" & 7" (slab sections) • Span Lengths: 9'± (in bridge sections) • Waterway Opening Height: 7'± • Skew at Abutments: 0° • Curb-to-Curb Width: 22'± • Expansion Joints: • Culvert ϕ or Dimensions: 7' RCPs	The facility changes from 7' diameter RCP at inlet to at least 2 generations of slab bridge. The outlet leads to Structure No. 25
Railings, Sidewalks & Curbs	• Railing Type: None Left Right • Railing Height: Left Right • Sidewalks on 1 side(s) • Width of Sidewalk: Left: Right: :5' • Curb Height: 6" • Median Barrier: Yes [ ] No: [X]	All on Miller Lane
Deck Surface	• AC [ ] Concrete [X] Wood [ ]	AC approaches are in good condition
Span Hinges	• None [X]	
Restrainers	At: Abutments [ ] Bents [ ] None [X]	
Soffit Opening Locations	• None [X]	
Traffic Lanes on Structure	• No. of Traffic Lanes: 2 • Width of Median: None • Width of Shoulder, Left: Right: 5'	All on Miller Lane
Approaches	• Approach Slab at: BB [ ] EB [ ] None [X] • No. of Traffic Lanes: 2 • Width of Median: • Width of Shoulder: Left: Right: • Width of Sidewalk: Left: Right: 5' • Railing Type: None Left: Right • Railing Height: Left: Right	All on Miller Lane

SUBSTRUCTURE AND UNDERSIDE COMPONENTS	DESCRIPTION	CONDITION REMARKS
Abutments Types & Wingwalls	• Abutment Types: Concrete (@ slab sections) • Integral wingwalls [X] and/ or Headwalls [X]	
Bent	• Materials: • Number of bents: • Pier Wall Type [ ] Column Type [ ] • X-sectional Dimensions: • Skew at Bents:	n/a
Piling	• Not Visible [X] Pile Type: • Pile Extension:	
Abutment and/or Bent Footings	• Footings: Visible [ ] Not Visible [X] • Invert slab: Yes [X] No [ ]	
Embankment Condition and Erosion Control Measures	Stable	
Road Under the Bridge	• None [X] • No. of Traffic Lanes: • Width of Median: • Width of Shoulder: Left: Right • Width of Sidewalk: Left: Right	

MISCELLANEOUS FEATURES	DESCRIPTION	REMARKS
Evidence of Previous Work		
Visible Utilities	• Gas [X] Water [X] Sewer [X] • Electrical [X] Telecommunication [X] • Other Utilities: • Structure Lighting: • Manhole on Deck:	Many utilities cross the structure
Availability of Detours	Available	
Drainage Facilities on Structure	• None [ ] •	
Drainage Facilities Under Structure	Multiple drain outlets though the slab section's walls	
Existing Facilities at Structure	• Retaining Walls: None [ ] Integral [X] Near Abuts [X]	Street, store and restaurant above the structures
Visual Hydraulic Assessment – Fish Passage	Flow present [X] Fish Spawning Route [ ]	



Photo 3 – Culvert's alignment in the drive-through alley looking downstream



Photo 4 – Culvert's alignment in the drive-through alley looking upstream



Photo 5 – Inlet RCO



Photo 6 – View through the culvert inlet transitioning to bridge



Photo 7 – Upstream right side's badly scoured retaining walls



Photo 8 – Haphazard collection of retaining structures and failures upstream, right



Photo 9 – View of upstream creek, stone walls and Structure No. 27



Photo 10 – Abrupt RCP Transition to slab bridge in fair condition except for a vertical crack



Photo 11 – Major circumferential crack in both walls and slab, possibly do to settlement of an end



Photo 12 – Downstream end of bridge segment. Note 2 bridging vintages from concrete textures



Photo 13 – View of downstream creek and Structure No. 25



Photo 14 – View of 90° bend in the creek after the bridge toward adjacent Structure No. 25



Photo 15 – Utility crossings through the bridge segment



Photo 16 – Abrupt slab thickness change in the bridge segment

MILL VALLEY STRUCTURE NO. 30

STRUCTURE NO. 30 – RALSTON AVENUE OVER ARROYO CORTE MADERA DEL PRESIDIO HEADWATERS



Photo 1 - Street Level Looking East



Photo 2 – Street Level Looking West

SUMMARY & RECOMMENDATIONS

The culvert was visually inspected by Nader Tamannaie, PE, on April 28, 2020.

The field notes and photos are recorded in the subsequent pages of this section.

General Observations

This is the site of a 5' ϕ RCP conveying the flows Cascade Creek under Ralston Avenue. The culvert is fully functional, but has caused scour and erosion at its outlet and is slowly undermining itself there.

Structure's Qualitative Health & Serviceability Condition Score (0-100): < 70

Qualitative Estimate of Structure's Safe Remaining Life: < 35 years

Recommendations

1. Repair the scour under the culvert outlet and consider placing rock riprap at culvert outlet.
2. Repair the chipped and spalled downstream safety parapet on top of the headwall.
3. Keep an eye on the stacked rock supporting the approach roadway shoulder area near the culvert outlet.

Urgency of Maintenance Needs

The repairs are not terribly urgent, but the outlet erosion has the highest priority among those listed and may be handled by the City's maintenance crews.

Approximate Cost of Rehabilitation or Repairs: $10,000

FIELD OBSERVATION NOTES

Observation Date and Time: 4-28-20, 2:00 p.m. Caltrans District: 4 County: Marin

Facility Carried: Ralston Avenue Feature Intersected: Corte Madera Cr Headwaters Bridge ☐ Culvert ☒

Mill Valley Crossing No: 30 Caltrans Bridge No: _____ Year Built: _____

Total Width: ____ Total Length: 24'± No. of Spans (Bridge): ___ No. of Chambers (Culvert): 1

Site Coordinates (Apple iPhone): 37° 55' 27" N & 122° 33' 32" W Weather: Clear

Street Posted for Truck Weight Limit ☐ Speed Limit ☐ Nearest Postal Address: At W. Blithedale

SUPERSTRUCTURE AND TOPSIDE COMPONENTS	DESCRIPTION	CONDITION REMARKS
Superstructure Basics	• Structure Type & Materials: RCP • Alignment: Curved ☐ Tangent ☒ • Superstructure Depth: • Span Lengths: • Waterway Opening Height: 5' • Skew at Abutments: • Curb-to-Curb Width: 22' • Expansion Joints: n/a • Culvert ϕ or Dimensions: 5' ϕ	Reinforced concrete pipe (RCP)
Railings, Sidewalks & Curbs	• Railing Type: Conc Left ☒ Right ☒ • Railing Height: 2' Left ☒ Right ☒ • Sidewalks on 0 side(s) • Width of Sidewalk: Left: Right: • Curb Height: 6" • Median Barrier: Yes ☐ No ☐	Downstream side railing over the headwall has large spalls
Deck Surface	• AC ☒ Concrete ☐ Wood ☐	AC is in poor condition
Span Hinges n/a	• None ☐	n/a
Restrainers n/a	At: Abutments ☐ Bents ☐ None ☐	n/a
Soffit Opening Locations n/a	• None ☐	n/a
Traffic Lanes on Structure	• No. of Traffic Lanes: 1 • Width of Median: None • Width of Shoulder, Left: Right:	
Approaches	• Approach Slab at: BB ☐ EB ☐ None ☒ • No. of Traffic Lanes: 1 • Width of Median: n/a • Width of Shoulder: None Left: Right • Width of Sidewalk: None Left: Right • Railing Type: Left ☐ Right ☐ • Railing Height: Left: Right:	Downslope approach road on the right is supported on stacked rocks and the roadway AC is in poor condition.

SUBSTRUCTURE AND UNDERSIDE COMPONENTS	DESCRIPTION	CONDITION REMARKS
Abutments Types & Wingwalls	• Abutment Types: n/a • Integral wingwalls ☐ and/ or Headwalls ☒	Concrete headwalls
Bent	• Materials: • Number of bents: • Pier Wall Type ☐ Column Type ☐ • X-sectional Dimensions: • Skew at Bents:	n/a
Piling	• Not Visible ☐ Pile Type: • Pile Extension:	n/a
Abutment and/or Bent Footings	• Footings: Visible ☐ Not Visible ☐ • Invert slab: Yes ☐ No ☐	n/a
Embankment Condition and Erosion Control Measures	Little erosion upstream (area fenced off). More substantial erosion at the culvert outlet and just downstream	
Road Under the Bridge	• None ☐ • No. of Traffic Lanes: • Width of Median: • Width of Shoulder: Left: Right • Width of Sidewalk: Left: Right	n/a

MISCELLANEOUS FEATURES	DESCRIPTION	REMARKS
Evidence of Previous Work	☐ Seismic Retrofit ☐ Rehab & Repairs	
Visible Utilities	• Gas ☐ Water ☐ Sewer ☐ • Electrical ☒ Telecommunication ☒ • Other Utilities: • Structure Lighting: • Manhole on Deck:	
Availability of Detours	Stage construction	
Drainage Facilities on Structure	• None ☐ •	
Drainage Facilities Under Structure		n/a
Existing Facilities at Structure	• Retaining Walls: None ☒ Integral ☐ Near Abuts ☐	
Visual Hydraulic Assessment – Fish Passage	Flow present ☒ Fish Spawning Route ☐	



Photo 3 – Culvert inlet



Photo 4 – Viwe of downstream outlet and headwalls



Photo 5 – Scour under the culvert outlet due to flows and a resulting pool just downstream



Photo 6 – Downstream of culvert



Photo 7 – Approach roadway substructure adjacent to downstreamcreek supported by stacked rock



Photo 8 – The above approach roadway surface appears stable



Photo 9 – Chipped bridge rail top on the downstream side



Photo 10 – Gas service lines at the site

MILL VALLEY STRUCTURE NO. 31

STRUCTURE NO. 31 – OLD RR GRADE TRAILHEAD BRIDGE OVER ARROYO CORTE MADERA DEL PRESIDIO



Photo 1 - Street Level Looking East



Photo 2 - Street Level Looking West

SUMMARY & RECOMMENDATIONS

The Bridge was visually inspected by Nader Tamannaie, PE, on April 28, 2020.

The field notes and photos are recorded in the subsequent pages of this section.

General Observations

The bridge, has a relatively new wood deck and beam superstructure on concrete abutments. The bridge abutment foundations are unknown. The decking is in good condition, but the concrete walls are abraded and have cracks due to age. Overall, the bridge is in adequate condition.

Structure's Qualitative Health & Serviceability Condition Score (0-100): < 65

Qualitative Estimate of Structure's Safe Remaining Life: < 30 years

Recommendations

None

Urgency of Maintenance Needs

None.

Approximate Cost of Rehabilitation or Repairs

None

FIELD OBSERVATION NOTES

Observation Date and Time: 4-28-20, 2:30 p.m. Caltrans District: 4 County: Marin

Facility Carried: Old RR Grade Trailhead Feature Intersected: Core Madera Cr Bridge [X] Culvert [ ]

Mill Valley Crossing No: 31 Caltrans Bridge No: _____ Year Built: _____

Total Width: 14.5' Total Length: 12.5'± No. of Spans (Bridge): 1 No. of Chambers (Culvert): _____

Site Coordinates (Apple iPhone): 37° 55' 15" N & 122° 33' 20" W Weather: Sunny & Clear

Street Posted for: Truck Weight Limit [ ] Speed Limit [ ] Nearest Postal Address: Old RR & W. Blithedale

SUPERSTRUCTURE AND TOPSIDE COMPONENTS	DESCRIPTION	CONDITION REMARKS
Superstructure Basics	• Structure Type & Materials: Wood deck on Concrete abutments • Alignment: Curved [ ] Tangent [X] • Superstructure Depth: 12" • Span Lengths: 12.5' • Waterway Opening Height:8'± • Skew at Abutments: 15°± • Curb-to-Curb Width: 12' • Expansion Joints: n/a • Culvert ϕ or Dimensions: n/a	The wood deck is in good condition. The concrete substructure is so-so, but functional
Railings, Sidewalks & Curbs	• Railing Type: Wood Left [X] Right [X] • Railing Height: 3'-4" Left [X] Right [X] • Sidewalks on 0 side(s) • Width of Sidewalk: Left: Right • Curb Height: 5" • Median Barrier: Yes [ ] No: [ ]	
Deck Surface	• AC [ ] Concrete [ ] Wood [X]	
Span Hinges	• None [X]	
Restrainers	At: Abutments [ ] Bents [ ] None [X]	
Soffit Opening Locations	• None [X]	
Traffic Lanes on Bridge	• No. of Traffic Lanes: 1 • Width of Median: None • Width of Shoulder, Left: Right:	For firefighters and other emergency access only. Closed to regular autos
Approaches	• Approach Slab at: BB [ ] EB [ ] None [X] • No. of Traffic Lanes: 1 • Width of Median: None • Width of Shoulder: None Left: Right • Width of Sidewalk: Left: Right • Railing Type: None Left [ ] Right [ ] • Railing Height: Left Right:	

SUBSTRUCTURE AND UNDERSIDE COMPONENTS	DESCRIPTION	CONDITION REMARKS
Abutments Types & Wingwalls	• Abutment Types: Conc • Integral wingwalls [X] and/ or Headwalls: [ ]	The abutments have lots of rock pockets and are flow-abraded
Bent n/a	• Materials: • Number of bents: • Pier Wall Type [ ] Column Type [ ] • X-sectional Dimensions: • Skew at Bents:	
Piling	• Not Visible [X] Pile Type: • Pile Extension: Wood	
Abutment and/or Bent Footings	• Footings: Visible [ ] Not Visible [X] • Invert slab: Yes [X] No [ ]	Scour pool in the creek bed beyond the invert
Embankment Condition and Erosion Control Measures	There is somewhat-controlled erosion, getting worse on just downstream banks. There is rock riprap on the bank, upstream right side	
Road Under the Bridge	• None [X] • No. of Traffic Lanes: • Width of Median: • Width of Shoulder: Left: Right • Width of Sidewalk: Left: Right	

MISCELLANEOUS FEATURES	DESCRIPTION	REMARKS
Evidence of Previous Work	[ ] Seismic Retrofit [ ] Rehab & Repairs	The deck joists and hardware appear relatively recent
Visible Utilities	• Gas [ ] Water [X] Sewer [X] • Electrical [ ] Telecommunication [ ] • Other Utilities: • Structure Lighting: • Manhole on Deck:	
Availability of Detours	None	
Drainage Facilities on Structure	• None [ ] • 18” plastic pipe daylighting through upstream right bank near the bridge	
Drainage Facilities Under Structure		
Existing Facilities at Structure	• Retaining Walls: None [X] Integral [ ] Near Abuts [ ]	
Visual Hydraulic Assessment – Fish Passage	Flow present [X] Fish Spawning Route [ ]	



Photo 3 – Utility crossings



Photo 4 – Upstream view



Photo 5 – Highly abraded wingwall, upstream left



Photo 6 – Beams and hardware look relatively recent and are in good condition



Photo 7 – Low waterfall and creek bed scour beyond the bridge invert, downstream



Photo 8 – Ad hoc slope protection behind downstream right wingwall

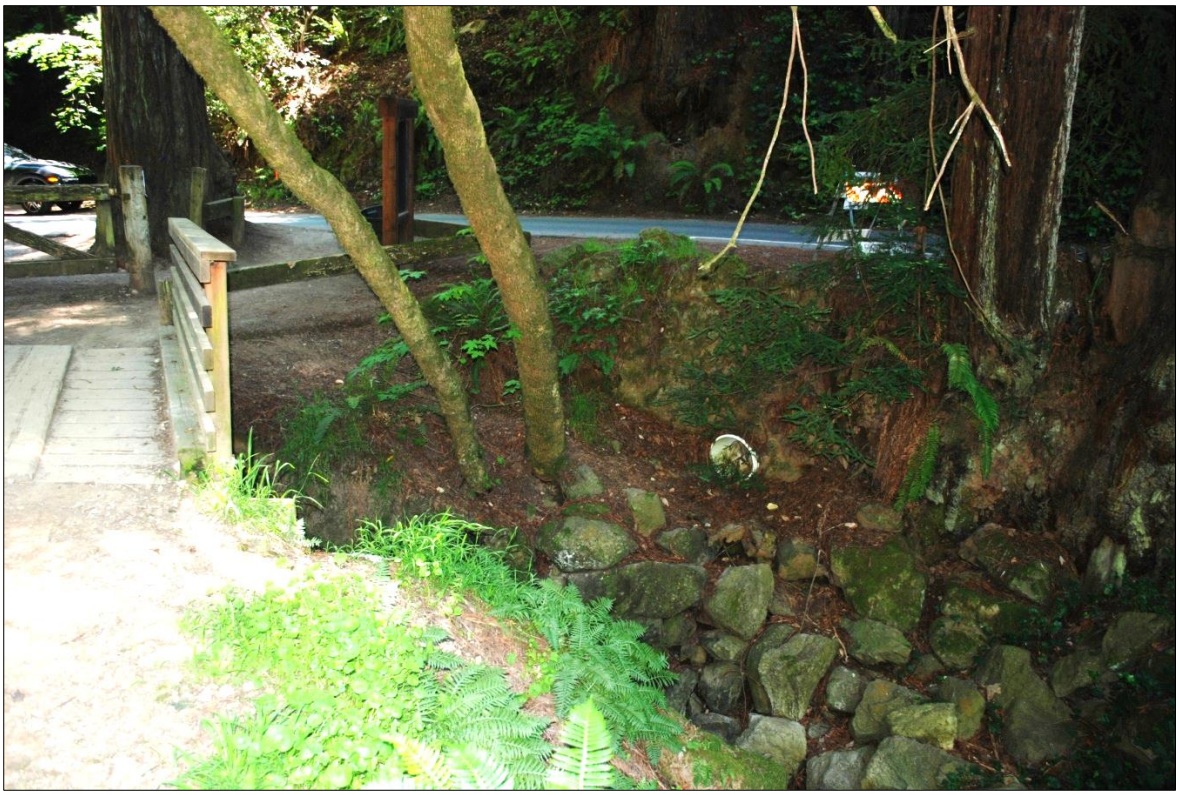

Photo 9 – Drainage pipe on the upstream right bank



Photo 10 – Runners on the bridge deck

MILL VALLEY STRUCTURE NO. 32

STRUCTURE NO. 32 – WEST BLITHEDALE AVE BRIDGE OVER ARROYO CORTE MADERA DEL PRESIDIO



Photo 1 - Street Level Looking East



Photo 2 - Street Level Looking West

SUMMARY & RECOMMENDATIONS

The Bridge was visually inspected by Nader Tamannaie, PE, on April 28, 2020.

The field notes and photos are recorded in the subsequent pages of this section.

General Observations

The bridge is a concrete slab bridge on concrete abutments. It is aged, likely at least 80 years old, with unknown foundations. The quality of original concrete is not the best and the seasonal high flows have been abrasive and caused damage to the base of the abutment walls. Creek scour and pooling just beyond the concrete invert, and erosion on the adjacent banks, are visible

Structure's Qualitative Health & Serviceability Condition Score (0-100): < 50

Qualitative Estimate of Structure's Safe Remaining Life: < 20 years

Recommendations

1. Repair the chipped, spalled and abraded interior concrete face of the two abutment walls.
2. Fill in with special grout the oversized hole in the abutment wall where a utility pipe crosses the creek under the bridge.
3. Install hand rails to bring railing heights to standard when the bridge is worked on for above reasons.
4. Protect the invert end with riprap.

Urgency of Maintenance Needs

The repairs should be scheduled for the next five years.

Approximate Cost of Rehabilitation or Repairs : $40,000

FIELD OBSERVATION NOTES

Observation Date and Time: 4-28-20, 3:00 p.m. Caltrans District: 4 County: Marin

Facility Carried: W. Blithedale Ave Feature Intersected: Cascade Creek Bridge [X] Culvert [ ]

Mill Valley Crossing No: 32 Caltrans Bridge No: _____ Year Built: _____

Total Width: 22' Total Length: 15'± No. of Spans (Bridge): 1 No. of Chambers (Culvert): _____

Site Coordinates (Apple iPhone): 37° 55' 15" N & 122° 33' 20" W Weather: Sunny & Clear

Street Posted for: Truck Weight Limit [ ] Speed Limit [ ] Nearest Postal Address: At Old RR Trailhead

SUPERSTRUCTURE AND TOPSIDE COMPONENTS	DESCRIPTION	CONDITION REMARKS
Superstructure Basics	• Structure Type & Materials: Concrete slab on Concrete abutments • Alignment: Curved [ ] Tangent [X] • Superstructure Depth: 10" • Span Lengths: 13' • Waterway Opening Height:9'± • Skew at Abutments: 30°± • Curb-to-Curb Width: 20'± • Expansion Joints: n/a • Culvert ϕ or Dimensions: n/a	Scour damage in interior abutment walls
Railings, Sidewalks & Curbs	• Railing Type: Conc Left [X] Right [X] • Railing Height: 1'-8" Left [X] Right [X] • Sidewalks on 0 side(s) • Width of Sidewalk: Left: Right • Curb Height: n/a • Median Barrier: Yes [ ] No: [ ]	
Deck Surface	• AC [X] Concrete [ ] Wood [ ]	
Span Hinges	• None [X]	
Restrainers	At: Abutments [ ] Bents [ ] None [X]	
Soffit Opening Locations	• None [X]	
Traffic Lanes on Bridge	• No. of Traffic Lanes: 2 • Width of Median: None • Width of Shoulder, Left: Right:	
Approaches	• Approach Slab at: BB [ ] EB [ ] None [X] • No. of Traffic Lanes: 2 • Width of Median: None • Width of Shoulder: None Left: Right • Width of Sidewalk: Left: Right • Railing Type: None Left [ ] Right [ ] • Railing Height, Left Right:	

SUBSTRUCTURE AND UNDERSIDE COMPONENTS	DESCRIPTION	CONDITION REMARKS
Abutments Types & Wingwalls	• Abutment Types: Conc • Integral wingwalls [X] and/ or Headwalls: [ ]	
Bent n/a	• Materials: • Number of bents: • Pier Wall Type [ ] Column Type [ ] • X-sectional Dimensions: • Skew at Bents:	
Piling	• Not Visible [X] Pile Type: • Pile Extension:	
Abutment and/or Bent Footings	• Footings: Visible [ ] Not Visible [X] • Invert slab: Yes [X] No [ ]	
Embankment Condition and Erosion Control Measures	There is bank erosion on both sides of the bridge	
Road Under the Bridge	• None [X] • No. of Traffic Lanes: • Width of Median: • Width of Shoulder: Left: Right • Width of Sidewalk: Left: Right	

MISCELLANEOUS FEATURES	DESCRIPTION	REMARKS
Evidence of Previous Work	[ ] Seismic Retrofit [ ] Rehab & Repairs	The deck joists and hardware appear relatively recent
Visible Utilities	• Gas [ ] Water [ ] Sewer [X] • Electrical [X] Telecommunication [X] • Other Utilities: • Structure Lighting: • Manhole on Deck:	
Availability of Detours	None	
Drainage Facilities on Structure	• None [X] •	
Drainage Facilities Under Structure	None	
Existing Facilities at Structure	• Retaining Walls: None [ ] Integral [X] Near Abuts [ ]	Retaining wall is downstream, left
Visual Hydraulic Assessment – Fish Passage	Flow present [X] Fish Spawning Route [ ]	



Photo 3 – Bridge barrier rail



Photo 4 – Interior view



Photo 5 – Low waterfall at the edge of, and scour pool beyond, the invert



Photo 6 – Upstream view



Photo 7 – Looking upstream from the bridge



Photo 8 – Downstream right abutment and wingwall scour and abrasion



Photo 9 – Poor quality original abutment concrete (upstream right) and scour at the invert



Photo 10 – Abutment/wingwall scour damage close-up. No concrete reinforcement is visible



Photo 11 – Oversized utility pipe opening in abutment, poor quality concrete & Original formwork boards are still remaining in place



Photo 12 – More concrete scour detail

MILL VALLEY STRUCTURE NO. 33

STRUCTURE NO. 33 – W. BLITHEDALE AVENUE OVER ARROYO CORTE MADERA DEL PRESIDIO TRIBUTARY



Photo 1 - Street Level Looking East



Photo 2 – Street Level Looking West

SUMMARY & RECOMMENDATIONS

The culvert was visually inspected by Nader Tamannaie, PE, on April 28, 2020.

The field notes and photos are recorded in the subsequent pages of this section.

General Observations

This is the site of an 18" ϕ HDPE pipe to carry the drainage from the upper slopes under the roadway to the creel. The inlet has a set of short headwalls with wingwalls and a trach rack.

Structure's Qualitative Health & Serviceability Condition Score (0-100): < 95

Qualitative Estimate of Structure's Safe Remaining Life: < 40 years

Recommendations

No repairs or site corrections are necessary

Urgency of Maintenance Needs

None

Approximate Cost of Rehabilitation or Repairs :

None

FIELD OBSERVATION NOTES

Observation Date and Time: 4-28-20, 3:30 p.m. Caltrans District: 4 County: Marin

Facility Carried: W. Blithedale Ave Feature Intersected: Corte Madera Cr Tributary Bridge ☐ Culvert ☒

Mill Valley Crossing No: 33 Caltrans Bridge No: _____ Year Built: _____

Total Width: ____ Total Length: 28'± No. of Spans (Bridge): ___ No. of Chambers (Culvert): 1

Site Coordinates (Apple iPhone): 37° 55' 10" N & 122° 33' 14" W Weather: Clear

Street Posted for Truck Weight Limit ☐ Speed Limit ☐ Nearest Postal Address: At Lee Ave

SUPERSTRUCTURE AND TOPSIDE COMPONENTS	DESCRIPTION	CONDITION REMARKS
Superstructure Basics	• Structure Type & Materials: HDPE Pipe • Alignment: Curved ☐ Tangent ☒ • Superstructure Depth: • Span Lengths: • Waterway Opening Height: 5' • Skew at Abutments: 40°± • Curb-to-Curb Width: ' • Expansion Joints: n/a • Culvert ϕ or Dimensions: 18" ϕ	Trash rack at the inlet
Railings, Sidewalks & Curbs	• Railing Type: None Left ☐ Right ☐ • Railing Height: 2' Left ☐ Right ☐ • Sidewalks on 0 side(s) • Width of Sidewalk: Left: Right: • Curb Height: 6" • Median Barrier: Yes ☐ No ☐	
Deck Surface	• AC ☒ Concrete ☐ Wood ☐	
Span Hinges	• None ☐	n/a
Restrainers	At: Abutments ☐ Bents ☐ None ☐	n/a
Soffit Opening Locations	• None ☐	n/a
Traffic Lanes on Structure	• No. of Traffic Lanes: 1 • Width of Median: None • Width of Shoulder, Left: Right:	
Approaches	• Approach Slab at: BB ☐ EB ☐ None ☒ • No. of Traffic Lanes: 1 • Width of Median: n/a • Width of Shoulder: None Left: Right • Width of Sidewalk: None Left: Right • Railing Type: Left ☐ Right ☐ • Railing Height: Left: Right:	

SUBSTRUCTURE AND UNDERSIDE COMPONENTS	DESCRIPTION	CONDITION REMARKS
Abutments Types & Wingwalls	• Abutment Types: n/a • Integral wingwalls ☐ and/ or Headwalls ☒	Concrete headwalls & trash rack
Bent	• Materials: • Number of bents: • Pier Wall Type ☐ Column Type ☐ • X-sectional Dimensions: • Skew at Bents:	n/a
Piling	• Not Visible ☐ Pile Type: • Pile Extension:	n/a
Abutment and/or Bent Footings n/a	• Footings: Visible ☐ Not Visible ☐ • Invert slab: Yes ☐ No ☐	n/a
Embankment Condition and Erosion Control Measures	Little erosion at pipe outlet	
Road Under the Bridge	• None ☐ • No. of Traffic Lanes: • Width of Median: • Width of Shoulder: Left: Right • Width of Sidewalk: Left: Right	n/a

MISCELLANEOUS FEATURES	DESCRIPTION	REMARKS
Evidence of Previous Work	☐ Seismic Retrofit ☐ Rehab & Repairs	
Visible Utilities	• Gas ☐ Water ☐ Sewer ☒ • Electrical ☒ Telecommunication ☒ • Other Utilities: • Structure Lighting: • Manhole on Deck:	
Availability of Detours	TBD	
Drainage Facilities on Structure	• None ☐ •	
Drainage Facilities Under Structure		
Existing Facilities at Structure	• Retaining Walls: None ☒ Integral ☐ Near Abuts ☐	
Visual Hydraulic Assessment – Fish Passage	Flow present ☒ Fish Spawning Route ☐	



Photo 3 – Culvert outlet



Photo 4 – Culvert inlet



Photo 5 – Culvert outlet area and riprap not being directly under the pipe to avoid erosion



Photo 6 – Part of the watershed contributingto the flows in the culvert

MILL VALLEY STRUCTURE NO. 34

STRUCTURE NO. 34 - PEDESTRIAN AND BIKE PATH BRIDGE OVER ARROYO CORTE MADERA DEL PRESIDIO



Photo 1 - Street Level Looking North



Photo 3 – Street Level Looking Sorth

SUMMARY & RECOMMENDATIONS

The Bridge was visually inspected by Nader Tamannaie, PE, on April 28, 2020 and other occasions.

The field notes and photos are recorded in the subsequent pages of this section.

General Observations

The structure is at the end of a relatively short foot/bike path on the other side of the creek from W. Blithedale Ave, splitting from the Old RR Grade Trail, and merging with W. Blithedale Ave at the site of the structure. The age of this concrete pedestrian bridge, supported on presumed concrete abutments, is unknown, but may go back close to 100 years. This trail may have been the main travel way here before W. Blithedale Ave existed.

At the moment, the structure is a mishmash of concrete deck, one mostly-broken abutment, a broken invert slab, earth on the deck, "soilcrete" and a 12"± ϕ steel utility pipe, all running at skew relative to the trail. The original bridge framing appears to have been a deck slab on two short in height abutment walls and invert slab. One abutment wall (west side) is about 70% broken and fallen away, and no signs of any internal wall rebar reinforcement can be seen. Also, no signs of any abutment foundations exists and the two abutments, the broken invert slab and the deck slab may have formed a box type structure at some point, which subsequently became partly destroyed over the years through the forces of flow and erosion, as well as poor initial construction practice. The deck surface, mostly covered by earth, is not level and appears to have steps in it. It is not clear if at some point, as a result of loss of most of one abutment's support, the deck has been extended to the adjacent creek bank for auxiliary support.

The bike riders travel fast over these bumps. There are no railings on the deck to prevent falling in the creek, nor clear cautionary signs warning of the hazards. This structure does not appear to be sustainable for too long, especially if swift flows are anticipated in the future.

Structure's Qualitative Health & Serviceability Condition Score (0-100): < 5

Qualitative Estimate of Structure's Safe Remaining Life: < 3 years

Recommendations

1. The current conditions are hazardous. Place posts and yellow caution tape between them at the edges of the deck to delineate the drop-off areas and encourage slow bike speeds with signage.
2. Construct a wood stud wall where the fallen abutment used to be, line the back of it with geotextile fabric and fill the back with rocks and soil between the rock
3. Replace the bridge with a single-span, short prefabricated wood or steel one on proper walls and foundations.

Urgency of Maintenance Needs

The signage and cautionary recommendations in 1 and 2 above are urgent. For continuation of service of providing recreational opportunities for the users, bridge replacement should follow.

Approximate Cost of Rehabilitation or Repairs

Temporary repairs and fencing by City maintenence forces.

Replacement Cost: $42,000

FIELD OBSERVATION NOTES

Observation Date and Time: 4-28-20, 40 p.m. Caltrans District: 4 County: Marin

Facility Carried: Pedestrian/Bike Path Feature Intersected: Corte Madera Cr Bridge [X] Culvert [ ]

Mill Valley Crossing No: 34 Caltrans Bridge No: _____ Year Built: _____

Total Width: 24'± Total Length: U/K No. of Spans (Bridge): 1 No. of Chambers (Culvert): _____

Site Coordinates (Apple iPhone): 37° 55' 11" N & 122° 33' 14" W Weather: Sunny & Clear

Street Posted for: Truck Weight Limit [ ] Speed Limit [ ] Nearest Postal Address: 412-422 W Blithedale

SUPERSTRUCTURE AND TOPSIDE COMPONENTS	DESCRIPTION	CONDITION REMARKS
Superstructure Basics	• Structure Type & Materials: Conc slab & abut • Alignment: Curved [ ] Tangent [X] • Superstructure Depth: Irregular • Span Lengths: Irregular • Waterway Opening Height: 3'±' • Skew at Abutments: Unclear • Curb-to-Curb Width: n/a • Expansion Joints: n/a • Culvert ϕ or Dimensions: n/a	This structure is a very poor and precarious condition. One abutment is about 70 percent fallen away and no signs of any internal reinforcement can be seen.
Railings, Sidewalks & Curbs	• Railing Type: None Left [X] Right [X] • Railing Height: n/ Left [X] Right [X] • Sidewalks on 0 side(s) • Width of Sidewalk: Left: Right: • Curb Height: n/a • Median Barrier: Yes [ ] No [X]	
Deck Surface	• AC [ ] Concrete [ ] Wood [ ]	Earth over concrete deck
Span Hinges	• None [X]	
Restrainers	At: Abutments [ ] Bents [ ] None [X]	
Soffit Opening Locations	• None [X]	
Traffic Lanes on Bridge	• No. of Traffic Lanes: Pedestrians only • Width of Median: n/a • Width of Shoulder, Left: Right:	
Approaches	• Approach Slab at: BB [ ] EB [ ] None [X] • No. of Traffic Lanes • Width of Median: • Width of Shoulder: None Left: Right • Width of Sidewalk: None Left: Right • Railing Type: Left [ ] Right [ ] • Railing Height: Left: Right:	

SUBSTRUCTURE AND UNDERSIDE COMPONENTS	DESCRIPTION	CONDITION REMARKS
Abutments Types & Wingwalls	• Abutment Types: Concrete • Integral wingwalls ☐ and/ or Headwalls: ☐	
Bent	• Materials: • Number of bents: • Pier Wall Type ☐ Column Type ☐ • X-sectional Dimensions: • Skew at Bents:	n/a
Piling	• Not Visible ☒ Pile Type: • Pile Extension:	
Abutment and/or Bent Footings n/a	• Footings: Visible ☐ Not Visible ☒ • Invert slab: Yes ☒ No ☐	In all likelihood, no footings exist. Possible remnants of old invert slab at the site
Embankment Condition and Erosion Control Measures	Signs of erosion, scour and their results are prevalent and the current conditions may have resulted from erosion and poor and very old structural construction	
Road Under the Bridge	• None ☐ • No. of Traffic Lanes: • Width of Median: • Width of Shoulder: Left: Right • Width of Sidewalk: Left: Right	n/a

MISCELLANEOUS FEATURES	DESCRIPTION	REMARKS
Evidence of Previous Work	☐ Seismic Retrofit ☐ Rehab & Repairs	Recent cautionary cones placed on the deck undulation
Visible Utilities	• Gas ☐ Water ☒ Sewer ☐ • Electrical ☒ Telecommunication ☒ • Other Utilities: • Structure Lighting: • Manhole on Deck:	The waterline spanning the creek here may not be intentional and should be checked with MWD
Availability of Detours	Pedestrians and bikes may use the adjacent W. Blithedale Ave	
Drainage Facilities on Structure	• None ☒ •	
Drainage Facilities Under Structure	None	
Existing Facilities at Structure	• Retaining Walls: None ☐ Integral ☐ Near Abuts ☐	The trail merges with W. Blithedale Ave here
Visual Hydraulic Assessment – Fish Passage	Flow present ☒ Fish Spawning Route ☐	



Photo 3 – View of one of one bridge abutment, mostly broken and fallen to one side



Photo 4 – Above view with utility pipe (likely water) & broken abutment piece in foreground



Photo 5 – Close up of the two abutments and other pieces of concrete (possibly old invert)



Photo 6 – Close up of damaged abutment adjacent to utility pipe



Photo 7 - View of bridge from upstream



Photo 8 – Concrete riffle just downstream of the bridge, indicator of multiple failures at the site



Photo 9 – A step on the concrete deck, identified by cones for user caution



Photo 10 - Step area close up, where the deck has been extended over pipe, resting on earth



Photo 11 – The hole on top, opened up behind the falling abutment



Photo 12 – The fallen and missing abutment wall

MILL VALLEY STRUCTURE NO. 35

STRUCTURE NO. 35 – WEST BLITHDALE AVENUE BRIDGE OVER ARROYO CORTE MADERA DEL PRESIDIO



Photo 1 - Street Level Looking North



Photo 2 – Street Level Looking South

SUMMARY & RECOMMENDATIONS

The Bridge was visually inspected by Nader Tamannaie, PE, on April 28, 2020.

The field notes and photos are recorded in the subsequent pages of this section.

General Observations

This is a reinforced concrete slab bridge on short concrete abutments, perhaps between 80 to 100 years old. The bridge is typical in this area, having not the highest quality concrete, narrow and possibly on shallow foundations. The barriers are on the same vintage as the bridge and not crashworthy, too short in height for pedestrians and bicyclist safety as well. No documentation of the bridge construction exists. The deck appears to be in reasonable working condition. However, the abutments are abraded by the flows and, along with the wingwalls, are scoured at their bases. The scoured bottom strip is progressively being chipped away by the flows, debris and rock moving in the flows.

Structure's Qualitative Health & Serviceability Condition Score (0-100): < 40

Qualitative Estimate of Structure's Safe Remaining Life: < 15 years

Recommendations

1. Repair all scoured abutment and wingwall bases and protect with rock riprap embedded in creek bed. These repairs may involve underpinning the vertical concrete walls and filling the voids with reinforcement and special grout.
2. Add handrail to the barriers for additional safety if the latter is ever modified or worked on.

Urgency of Maintenance Needs

The repairs should be scheduled in the next five years.

Approximate Cost of Rehabilitation or Repairs : $40,000

FIELD OBSERVATION NOTES

Observation Date and Time: 4-28-20, 4:45 p.m. Caltrans District: 4 County: Marin

Facility Carried: W. Blithedale Ave Feature Intersected: Corte Madera Cr Bridge [X] Culvert [ ]

Mill Valley Crossing No: 35 Caltrans Bridge No: _____ Year Built: _____

Total Width: 20'± Total Length: 15' No. of Spans (Bridge): 1 No. of Chambers (Culvert): _____

Site Coordinates (Apple iPhone): 37° 55' 07" N & 122° 33' 14" W Weather: Sunny & Clear

Street Posted for: Truck Weight Limit [ ] Speed Limit [ ] Nearest Postal Address: At Marsh Drive

SUPERSTRUCTURE AND TOPSIDE COMPONENTS	DESCRIPTION	CONDITION REMARKS
Superstructure Basics	• Structure Type & Materials: RC Concrete slab • Alignment: Curved [ ] Tangent [X] • Superstructure Depth: 11" • Span Lengths: 13' • Waterway Opening Height: 5.5'±' • Skew at Abutments: 0^0 • Curb-to-Curb Width: 18' • Expansion Joints: n/a • Culvert ϕ or Dimensions: n/a	The deck is in reasonable condition, but the bottoms of the abutments and wingwalls are badly scoured and abraded by the flows
Railings, Sidewalks & Curbs	• Railing Type: Concrete Left [X] Right [X] • Railing Height: 2' Left [X] Right [X] • Sidewalks on 0 side(s) • Width of Sidewalk: Left: Right: • Curb Height: n/a • Median Barrier: Yes [ ] No [X]	
Deck Surface	• AC [X] Concrete [ ] Wood [ ]	
Span Hinges	• None [X]	
Restrainers	At: Abutments [ ] Bents [ ] None [X]	
Soffit Opening Locations	• None [X]	
Traffic Lanes on Bridge	• No. of Traffic Lanes: 2 • Width of Median: n/a • Width of Shoulder, Left: Right:	
Approaches	• Approach Slab at: BB [ ] EB [ ] None [X] • No. of Traffic Lanes 2 • Width of Median: • Width of Shoulder: None Left: Right • Width of Sidewalk: None Left: Right • Railing Type: Left [ ] Right [ ] • Railing Height: Left: Right:	

SUBSTRUCTURE AND UNDERSIDE COMPONENTS	DESCRIPTION	CONDITION REMARKS
Abutments Types & Wingwalls	• Abutment Types: Conc • Integral wingwalls [X] and/ or Headwalls [ ]	
Bent n/a	• Materials: • Number of bents: • Pier Wall Type [ ] Column Type [ ] • X-sectional Dimensions: • Skew at Bents:	
Piling	• Not Visible [X] Pile Type: • Pile Extension:	
Abutment and/or Bent Footings n/a	• Footings: Visible [X] Not Visible [ ] • Invert slab: Yes [ ] No [X]	
Embankment Condition and Erosion Control Measures	Creeks banks are stable	
Road Under the Bridge	• None [X] • No. of Traffic Lanes: • Width of Median: • Width of Shoulder: Left: Right • Width of Sidewalk: Left: Right	

MISCELLANEOUS FEATURES	DESCRIPTION	REMARKS
Evidence of Previous Work	[ ] Seismic Retrofit [ ] Rehab & Repairs	
Visible Utilities	• Gas [X] Water [X] Sewer [X] • Electrical [X] Telecommunication [X] • Other Utilities: • Structure Lighting: • Manhole on Deck:	
Availability of Detours	Pedestrians and bikes may use the adjacent W. Blithedale Ave	
Drainage Facilities on Structure	• None [X] •	
Drainage Facilities Under Structure	None	
Existing Facilities at Structure	• Retaining Walls: None [ ] Integral [X] Near Abuts [ ]	Rock retaining wall downstream right
Visual Hydraulic Assessment – Fish Passage	Flow present [X] Fish Spawning Route [ ]	



Photo 3 – Downstream left bridge view



Photo 4 – Stacked rock wingwall and retaining wall downstream right



Photo 5 – Interior bridge details



Photo 6 – Underside details showing the abraded abutment walls



Photo 7 – Two vintages of construction, scour damage and abraded wall are evident



Photo 8 – Downstream wingwall base scour



Photo 9 – More wingwall base scour



Photo 10 – Wet utilities crossing the creek

MILL VALLEY STRUCTURE NO. 36

STRUCTURE NO. 36 – WEST BLITHDALE AVENUE BRIDGE OVER ARROYO CORTE MADERA DEL PRESIDIO



Photo 1 - Street Level Looking North



Photo 3 – Street Level Looking Sorth

SUMMARY & RECOMMENDATIONS

The Bridge was visually inspected by Nader Tamannaie, PE, on April 28, 2020.

The field notes and photos are recorded in the subsequent pages of this section.

General Observations

This is a reinforced concrete slab bridge on concrete abutments, perhaps between 80 to 100 years old. The bridge is older and typical in this area, not having the highest quality concrete, being narrow and possibly on shallow foundations. The tree log barriers are unusual, not crashworthy and too short for pedestrians and bicyclist safety. The deck appears to be in reasonable working condition. However, the abutments are abraded by the flows and, along with the wingwalls, are scoured at the base. The scoured bottom strip is progressively being chipped away at by the flows, debris and rock moving in the flows.

Structure's Qualitative Health & Serviceability Condition Score (0-100): < 40

Qualitative Estimate of Structure's Safe Remaining Life: < 25 years

Recommendations

1. Repair all scoured abutment and wingwall bases by filling the voids with special epoxy grout and protect with rock riprap embedded in creek bed.
2. Clear debris and dirt from the RCP daylighting through the abutment wingwall.
3. Add safety rails to the barriers if any work is done to the bridge or railings.

Urgency of Maintenance Needs

The drain pipe debris should be cleared by the maintenance forces any time. The handrails should be installed at the same time or sooner.

The abutment, wingwall and retaining wall scour repairs should be scheduled in the next 5-10 years.

Approximate Cost of Rehabilitation or Repairs: $35,000

FIELD OBSERVATION NOTES

Observation Date and Time: 4-28-20, 5:10 p.m. Caltrans District: 4 County: Marin

Facility Carried: W. Blithedale Ave Feature Intersected: Corte Madera Cr Bridge [X] Culvert [ ]

Mill Valley Crossing No: 36 Caltrans Bridge No: _____ Year Built: _____

Total Width: Varies 24'-36' Total Length: 18' No. of Spans (Bridge): 1 No. of Chambers (Culvert): ___

Site Coordinates (Apple iPhone): 37° 55' 07" N & 122° 33' 14" W Weather: Sunny & Clear

Street Posted for: Truck Weight Limit [ ] Speed Limit [ ] Nearest Postal Address: At Marsh Drive

SUPERSTRUCTURE AND TOPSIDE COMPONENTS	DESCRIPTION	CONDITION REMARKS
Superstructure Basics	• Structure Type & Materials: RC slab • Alignment: Curved [X] Tangent [ ] • Superstructure Depth: 11" • Span Lengths: 16' • Waterway Opening Height: 8'± • Skew at Abutments: 40°± • Curb-to-Curb Width: Varies 20'± - 32'± • Expansion Joints: n/a • Culvert ϕ or Dimensions: n/a	
Railings, Sidewalks & Curbs	• Railing Type: Tree logs Left [X] Right [X] • Railing Height: Left 2.5'± Right 1'± • Sidewalks on 0 side(s) • Width of Sidewalk: Left: Right: • Curb Height: n/a • Median Barrier: Yes [ ] No [X]	
Deck Surface	• AC [X] Concrete [ ] Wood [ ]	
Span Hinges	• None [X]	
Restrainers	At: Abutments [ ] Bents [ ] None [X]	
Soffit Opening Locations	• None [X]	
Traffic Lanes on Bridge	• No. of Traffic Lanes: 2 • Width of Median: n/a • Width of Shoulder, Left: Right:	
Approaches	• Approach Slab at: BB [ ] EB [ ] None [X] • No. of Traffic Lanes 2 • Width of Median: • Width of Shoulder: None Left: Right • Width of Sidewalk: None Left: Right • Railing Type: Left [ ] Right [ ] • Railing Height: Left: Right:	

SUBSTRUCTURE AND UNDERSIDE COMPONENTS	DESCRIPTION	CONDITION REMARKS
Abutments Types & Wingwalls	• Abutment Types: Conc • Integral wingwalls [X] and/ or Headwalls [ ]	Wingwalls and retaining walls are scoured under
Bent n/a	• Materials: • Number of bents: • Pier Wall Type [ ] Column Type [ ] • X-sectional Dimensions: • Skew at Bents:	
Piling	• Not Visible [X] Pile Type: • Pile Extension:	
Abutment and/or Bent Footings n/a	• Footings: Visible [X] Not Visible [ ] • Invert slab: Yes [ ] No [X]	Abutment wall bases are scoured
Embankment Condition and Erosion Control Measures	Bank erosion and sour are present	
Road Under the Bridge	• None [X] • No. of Traffic Lanes: • Width of Median: • Width of Shoulder: Left: Right • Width of Sidewalk: Left: Right	

MISCELLANEOUS FEATURES	DESCRIPTION	REMARKS
Evidence of Previous Work	[ ] Seismic Retrofit [ ] Rehab & Repairs	
Visible Utilities	• Gas [X] Water [X] Sewer [X] • Electrical [X] Telecommunication [X] • Other Utilities: Small vault on upstream left bank • Structure Lighting: • Manhole on Deck:	
Availability of Detours	None	
Drainage Facilities on Structure	• None [X] •	
Drainage Facilities Under Structure	Drain RCPs daylighting through the wing-wall and embankment, downstream right	
Existing Facilities at Structure	• Retaining Walls: None [ ] Integral [X] Near Abuts [ ]	Concrete walls on up-stream side and stacked rock downstream right
Visual Hydraulic Assessment – Fish Passage	Flow present [X] Fish Spawning Route [ ]	



Photo 3 – Downstream left bridge view and the unusual tree log bridge barrier rail



Photo 4 – Upstream bridge edge view



Photo 5 – View through the bridge interior



Photo 6 – Two vintages of construction are evident



Photo 7 – Scouring of the abutment wall bottom



Photo 8 – More evidence of scour



Photo 9 – Plugged drain outlet in bridge wingwall



Photo 10 – Several wet utilities crossing the creek and a small vault



Photo 11 – Details of log railing connection to the bridge



Photo 12 – Nearby City / regional park

MILL VALLEY STRUCTURE NO. 37

STRUCTURE NO. 37 – MARGUERITE AVENUE BRIDGE OVER ARROYO CORTE MADERA DEL PRESIDIO



Photo 1 - Street Level Looking North



Photo 2 – Street Level Looking Sorth

SUMMARY & RECOMMENDATIONS

The Bridge was visually inspected by Nader Tamannaie, PE, on April 28, 2020.

The field notes and photos are recorded in the subsequent pages of this section.

General Observations

This is a reinforced concrete filled arch bridge, perhaps between 80 to 100 years old. The bridge is older and typical in this area, possibly on shallow foundations and having not the highest quality concrete. There are long horizontal and vertical cracks on the inside of the arch barrel and a large scour pool at the end of bridge invert.

Structure's Qualitative Health & Serviceability Condition Score (0-100): < 45

Qualitative Estimate of Structure's Safe Remaining Life: < 30 years

Recommendations

Repair the concrete cracks on the inside of the arch barrel. And protect the invert slab end with riprap.

Urgency of Maintenance Needs

The arch barrel concrete repairs should be scheduled in the next five years.

Approximate Cost of Rehabilitation or Repairs: $21,000

FIELD OBSERVATION NOTES

Observation Date and Time: 4-28-20, 6:00 p.m. Caltrans District: 4 County: Marin

Facility Carried: Marguerite Ave Feature Intersected: Corte Madera Cr Bridge [X] Culvert [ ]

Mill Valley Crossing No: 37 Caltrans Bridge No: _____ Year Built: _____

Total Width: 37' Total Length: 8' No. of Spans (Bridge): 1 No. of Chambers (Culvert): ____

Site Coordinates (Apple iPhone): 37° 55' 04" N & 122° 33' 13" W Weather: Sunny & Clear

Street Posted for: Truck Weight Limit [ ] Speed Limit [ ] Nearest Postal Address: At W. Blithedale

SUPERSTRUCTURE AND TOPSIDE COMPONENTS	DESCRIPTION	CONDITION REMARKS
Superstructure Basics	• Structure Type & Materials: RC Filled Arch • Alignment: Curved [ ] Tangent [X] • Superstructure Depth: 2' min and varies • Span Lengths: 8' • Waterway Opening Height: 11'± • Skew at Abutments: 0^0 • Curb-to-Curb Width: Varies 18.5' • Expansion Joints: n/a • Culvert ϕ or Dimensions: n/a	Vertical and horizontal structural concrete cracks in the inside of arch barrel
Railings, Sidewalks & Curbs	• Railing Type: Wood Left [X] Right [X] • Railing Height: 2' ± Left [X] Right [X] • Sidewalks on 0 side(s) • Width of Sidewalk: Left: Right: • Curb Height: n/a • Median Barrier: Yes [ ] No [X]	
Deck Surface	• AC [X] Concrete [ ] Wood [ ]	
Span Hinges	• None [X]	
Restrainers	At: Abutments [ ] Bents [ ] None [X]	
Soffit Opening Locations	• None [X]	
Traffic Lanes on Bridge	• No. of Traffic Lanes: 2 • Width of Median: n/a • Width of Shoulder, Left: Right:	
Approaches	• Approach Slab at: BB [ ] EB [ ] None [X] • No. of Traffic Lanes 2 • Width of Median: • Width of Shoulder: None Left: Right • Width of Sidewalk: None Left: Right • Railing Type: Left [ ] Right [ ] • Railing Height: Left: Right:	

SUBSTRUCTURE AND UNDERSIDE COMPONENTS	DESCRIPTION	CONDITION REMARKS
Abutments Types & Wingwalls	• Abutment Types: Conc • Integral wingwalls ☐ Headwalls ☒	
Bent n/a	• Materials: • Number of bents: • Pier Wall Type ☐ Column Type ☐ • X-sectional Dimensions: • Skew at Bents:	
Piling	• Not Visible ☒ Pile Type: • Pile Extension:	
Abutment and/or Bent Footings n/a	• Footings: Visible ☒ Not Visible ☐ • Invert slab: Yes ☒ No ☐	
Embankment Condition and Erosion Control Measures	Erosion is evident at both ends, large pool just past the invert	
Road Under the Bridge	• None ☒ • No. of Traffic Lanes: • Width of Median: • Width of Shoulder: Left: Right • Width of Sidewalk: Left: Right	

MISCELLANEOUS FEATURES	DESCRIPTION	REMARKS
Evidence of Previous Work	☐ Seismic Retrofit ☐ Rehab & Repairs	
Visible Utilities	• Gas ☒ Water ☒ Sewer ☒ • Electrical ☒ Telecommunication ☒ • Other Utilities: Fire hydrant nearby on W. Blithedale • Structure Lighting: • Manhole on Deck:	
Availability of Detours	Available	
Drainage Facilities on Structure	• None ☒ •	
Drainage Facilities Under Structure	DI on top, pipe daylighting downstream right	
Existing Facilities at Structure	• Retaining Walls: None ☒ Integral ☐ Near Abuts ☐	
Visual Hydraulic Assessment – Fish Passage	Flow present ☒ Fish Spawning Route ☐	



Photo 3 – Upstream check dam



Photo 4 – Downstream bridge and large scour pool



Photo 5 – View of bridge's interior from downstream end. Reason for arrows on invert is unknown



Photo 6 – Large vertical crack inside the upstream edge



Photo 7 – Full length horizontal crack inside the arch barrel and above the vertical crack



Photo 8 – DI at the bridge

MILL VALLEY STRUCTURE NO. 38

STRUCTURE NO. 38 – CORTE MADERA AVENUE BRIDGE OVER ARROYO CORTE MADERA DEL PRESIDIO



Photo 1 - Street Level Looking West



Photo 3 – Street Level Looking East

SUMMARY & RECOMMENDATIONS

The Bridge was visually inspected by Nader Tamannaie, PE, on April 29, 2020.

The field notes and photos are recorded in the subsequent pages of this section.

General Observations

This is a reinforced concrete slab bridge, perhaps between 80 to 100 years old. The bridge is typical in this area, possibly on shallow foundations, not having the highest quality concrete. It has short barrier railing without handrails. The bridge is in fair condition and functional.

Structure's Qualitative Health & Serviceability Condition Score (0-100): < 55

Qualitative Estimate of Structure's Safe Remaining Life: < 25 years

Recommendations

Install handrail on the bridge to the height of 42" if the railings are ever worked on due to damage, etc..

Urgency of Maintenance Needs

Handrails can be installed by City maintenance crews.

Approximate Cost of Rehabilitation or Repairs : $8,000

FIELD OBSERVATION NOTES

Observation Date and Time: 4-29-20, 8:30 a.m. Caltrans District: 4 County: Marin

Facility Carried: Corte Madera Ave Feature Intersected: Corte Madera Cr Bridge [X] Culvert [ ]

Mill Valley Crossing No: 38 Caltrans Bridge No: _____ Year Built: _____

Total Width: 22' Total Length: 19' No. of Spans (Bridge): 1 No. of Chambers (Culvert): ___

Site Coordinates (Apple iPhone): 37° 55' 00" N & 122° 33' 12" W Weather: Overcast morning

Street Posted for: Truck Weight Limit [ ] Speed Limit [ ] Nearest Postal Address: 350 Corte Madera

SUPERSTRUCTURE AND TOPSIDE COMPONENTS	DESCRIPTION	CONDITION REMARKS
Superstructure Basics	• Structure Type & Materials: RC slab • Alignment: Curved [ ] Tangent [X] • Superstructure Depth: 12" • Span Lengths: 18' • Waterway Opening Height: 9'± • Skew at Abutments: 20°± • Curb-to-Curb Width: Varies 14' • Expansion Joints: n/a • Culvert ϕ or Dimensions: n/a	Bridge is in functional condition
Railings, Sidewalks & Curbs	• Railing Type: Concrete Left [X] Right [X] • Railing Height: 2' ± Left [X] Right [X] • Sidewalks on right side(s) • Width of Sidewalk: Left: Right: 5' • Curb Height: 4" • Median Barrier: Yes [ ] No [X]	No handrails on low-height barriers
Deck Surface	• AC [ ] Concrete [X] Wood [ ]	
Span Hinges	• None [X]	
Restrainers	At: Abutments [ ] Bents [ ] None [X]	
Soffit Opening Locations	• None [X]	
Traffic Lanes on Bridge	• No. of Traffic Lanes: 1 • Width of Median: n/a • Width of Shoulder, Left: Right:	
Approaches	• Approach Slab at: BB [ ] EB [ ] None [X] • No. of Traffic Lanes 1 • Width of Median: • Width of Shoulder: None Left: Right • Width of Sidewalk: None Left: Right • Railing Type: Left [ ] Right [ ] • Railing Height: Left: Right:	

SUBSTRUCTURE AND UNDERSIDE COMPONENTS	DESCRIPTION	CONDITION REMARKS
Abutments Types & Wingwalls	• Abutment Types: Concrete • Integral wingwalls [X] Headwalls [ ]	
Bent	• Materials: • Number of bents: • Pier Wall Type [ ] Column Type [ ] • X-sectional Dimensions: • Skew at Bents:	n/a
Piling	• Not Visible [X] Pile Type: • Pile Extension:	
Abutment and/or Bent Footings	• Footings: Visible [ ] Not Visible [X] • Invert slab: Yes [ ] No [X]	
Embankment Condition and Erosion Control Measures	Embankments are stable. There is slight scour at tip of wingwall upstream left	
Road Under the Bridge	• None [X] • No. of Traffic Lanes: • Width of Median: • Width of Shoulder: Left: Right • Width of Sidewalk: Left: Right	

MISCELLANEOUS FEATURES	DESCRIPTION	REMARKS
Evidence of Previous Work	[ ] Seismic Retrofit [ ] Rehab & Repairs	
Visible Utilities	• Gas [X] Water [X] Sewer [X] • Electrical [X] Telecommunication [X] • Other Utilities: • Structure Lighting: • Manhole on Deck:	
Availability of Detours	Available	
Drainage Facilities on Structure	• None [X] •	
Drainage Facilities Under Structure	Pipe daylighting through wingwall next to wood retaining wall downstream left	
Existing Facilities at Structure	• Retaining Walls: None [ ] Integral [X] Near Abuts [ ]	Concrete retaining walls upstream left and downstream right, wood wall downstream left.
Visual Hydraulic Assessment – Fish Passage	Flow present [X] Fish Spawning Route [ ]	



Photo 3 – Downstream view from the bridge



Photo 4 – Bridge view from downstream



Photo 5 – View of the bridge underside from upstream end



Photo 6 – View of the bridge underside from downstream end



Photo 7 – View of various utility pipes under the bridge a drain pipe outlet through wingwall



Photo 8 – View of downstream

MILL VALLEY STRUCTURE NO. 39

STRUCTURE NO. 39 - KING STREET BRIDGE OVER ARROYO CORTE MADERA DEL PRESIDIO



Photo 1 - Street Level Looking East



Photo 2 - Street Level Looking West

SUMMARY & RECOMMENDATIONS

The Bridge was visually inspected by Manouchehr Mahmoudzadeh, PE, on April 1, 2020 and Nader Tamannaie on May 27, 2020.

The field notes and photos are recorded in the subsequent pages of this section.

General Observations

The bridge, a reinforced concrete slab, is likely 80 years old. It is of unknown foundations. The abutment and retaining walls connecting to the bridge started with poor quality concrete pours and scour and abrasive flows have taken their toll at the bottoms of these walls, rendering their condition poor. There are some cracks on the concrete railing; and railing height is substandard (<36")AC surfacing is in fair condition.

Structure's Qualitative Health & Serviceability Condition Score (0-100): < 40

Qualitative Estimate of Structure's Safe Remaining Life: < 25 years

Recommendations

1. Since the bridge is traveled by pedestrians and bicyclists, place handrail on concrete railings if any work will be scheduled on the railings for any other reason.
2. Repair retaining walls supporting embankment on both sides and the abutment walls damaged by scour and abrasive flows.
3. Clean moss growth on vertical surface of the structure.

Urgency of Maintenance Needs

The work on the recommended items above should be priority for the next 5 years to prolong the life of the structure.

Approximate Cost of Rehabilitation or Repairs : $40,000

FIELD OBSERVATION NOTES

Observation Date and Time: 4-1-20, 4:10 p.m. & 5-27-20 a.m. Caltrans District: 4 County: Marin

Facility Carried: King St Feature Intersected: Corte Madera Cr Bridge [X] Culvert [ ]

Mill Valley Crossing No: 39 Caltrans Bridge No: _____ Year Built: _____

Total Width: 17'-4" Total Length: 12'-4" No. of Spans (Bridge): 1 No. of Chambers (Culvert): _____

Site Coordinates (Apple iPhone): 37° 54' 54" N & 122° 33' 8" W Weather: Sunny & Clear

Street Posted for: Truck Weight Limit [ ] Speed Limit [ ] Nearest Postal Address: Corte Madera Ave

SUPERSTRUCTURE AND TOPSIDE COMPONENTS	DESCRIPTION	CONDITION REMARKS
Superstructure Basics	• Structure Type & Materials: RC Slab • Alignment: Curved [ ] Tangent [X] • Superstructure Depth: 12" • Span Lengths: 11' • Waterway Opening Height: 5'-10"± • Skew at Abutments: 15° ± • Curb-to-Curb Width: 16'-4" • Expansion Joints: None • Culvert ϕ or Dimensions: n/a	There are cracks and various parts of the bridge; and spalled area on the soffit. Signs of scour are visible at the bottom of abutments, wingwalls and retaining walls connecting to the bridge.
Railings, Sidewalks & Curbs	• Railing Type: Conc Left [x] Right [x] • Railing Height: Left 32" Right 32" • Sidewalks on 0 side(s) • Width of Sidewalk: Left: Right: • Curb Height: 6" • Median Barrier: Yes [ ] No: [X]	Railing height is substandard
Deck Surface	• AC [X] Concrete [ ] Wood [ ]	AC surfacing is in fair condition.
Span Hinges	• None [X]	
Restrainers	At: Abutments [ ] Bents [ ] None [X]	
Soffit Opening Locations	• None [X]	
Traffic Lanes on Bridge	• No. of Traffic Lanes: 1 lane in each direction • Width of Median: • Width of Shoulder, Left: Right:	
Approaches	• Approach Slab at: BB [ ] EB [ ] None [x] • No. of Traffic Lanes: n/a • Width of Median: None • Width of Shoulder: Left: Right: • Width of Sidewalk: Left: Right: • Railing Type: None Left [ ] Right [ ] • Railing Height: Left: Right:	Approach AC is fair condition

SUBSTRUCTURE AND UNDERSIDE COMPONENTS	DESCRIPTION	CONDITION REMARKS
Abutments Types & Wingwalls	• Abutment Types: Conc • Integral wingwalls [x] and/ or Headwalls: [ ]	Wingwalls at one side only
Bent n/a	• Materials: • Number of bents: • Pier Wall Type [ ] Column Type [ ] • X-sectional Dimensions: • Skew at Bents:	
Piling	• Not Visible [X] Pile Type: • Pile Extension:	
Abutment and/or Bent Footings	• Footings: Visible [ ] Not Visible [X] • Invert slab: Yes [ ] No [ ]	
Embankment Condition and Erosion Control Measures	Rock slope protection covered with vegetation on the East; and natural ground slope covered with vegetation the West bank. Channel walls connecting to the bridge on three sides.	Channel at the locale is stable.
Road Under the Bridge	• None [X] • No. of Traffic Lanes: • Width of Median: • Width of Shoulder: Left: Right • Width of Sidewalk: Left: Right	

MISCELLANEOUS FEATURES	DESCRIPTION	REMARKS
Evidence of Previous Work	[ ] Seismic Retrofit [ ] Rehab & Repairs	
Visible Utilities	• Gas [X] Water [X] Sewer [X] • Electrical [X] Telecommunication [X] • Other Utilities: • Structure Lighting: • Manhole on Deck:	There is 8” utility line with an expansion device running along right edge of bridge. There are also multiple additional wet utility pipe crossings under the bridge in the flow envelope.
Availability of Detours	Detour possible	
Drainage Facilities on Structure	• None [X] •	
Drainage Facilities Under Structure	None	
Existing Facilities at Structure	• Retaining Walls: None [ ] Integral [X] Near Abuts [X]	Retaining walls supporting West embankment
Visual Hydraulic Assessment – Fish Passage	Flow present [X] Fish Spawning Route	



Photo 3 – View of substructure & utility line looking north



Photo 4 – View of substructure & vegetation growth looking south



Photo 5 – Upstream walls connecting to the bridge



Photo 6 – Wall abrasion and scour at bottom of abutment and retaining walls



Photo 7 – Multiple utility pipes crossing under the bridge and potentially opposing the high flows



Photo 8 – Stone and concrete wall connecting to bridge abutment



Photo 9 – Natural creek bank adjoining one abutment



Photo 10 – Invert slab and its termination at downstream side into a scour pool



Photo 11 – Scour pool downstream



Photo 12 – Poor original concrete, made worse by abrasive flows over the years



Photo 13– Scour, abrasion and unraveling of poor quality concrete wall base

MILL VALLEY STRUCTURE NO. 40

STRUCTURE NO. 40 – WINWOOD PLACE PEDESTRIAN AND VEHICULAR BRIDGE OVER ARROYO CORTE MADERA DEL PRESIDIO



Photo 1 - Street Level Looking West



Photo 2 – Street Level Looking East

SUMMARY & RECOMMENDATIONS

The Bridge was visually inspected by Nader Tamannaie, PE, on April 29, 2020.

The field notes and photos are recorded in the subsequent pages of this section.

General Observations

1. This is a wood deck and beam bridge on two older concrete abutments of unknown foundations. The main bridge deck framing is 4x12 stringers topped by 12x4 planks, designed for both cars and pedestrians, This bridge is not for through auto traffic but for the residents driving to their garages or the courtyard in the middle of the two-block long Winwood Place. There is evidence (rusty runoff on one abutment) of possibly an older generation steel bridge. The bridge superstructure wood appears to be in reasonable condition, but the connection hardware has begun to develop rust. Abutment foundations are not visible, but they probably the walls sit on rock outcropping. The old and new bridge elements are in reasonable working conditions.
2. There is some evidence of scour under rock fortifications placed in front of the two abutments.
3. The banks are held back in three quadrants with walls and the fourth quadrant has been fortified with rock riprap that has begun to move.

Structure's Qualitative Health & Serviceability Condition Score (0-100): < 80

Qualitative Estimate of Structure's Safe Remaining Life: < 35 years

Recommendations

1. Solidified cement back riprap at one bridge quadrant should be repaired. Small rocks here should be removed and replaced with more substantial ones, as street drainage released on top of the area continues.
2. The bridge hardware should be monitored for rust.
3. The seismic viability of the cemented rock retaining walls downstream is questionable and should be investigated.

Urgency of Maintenance Needs

The ownership of the bridge should be determined first.

The retaining wall investigation for seismic safety (likely by private parties) are not urgent, but should be undertaken in the next 5 years or so.

Approximate Cost of Rehabilitation or Repairs : $15,000

FIELD OBSERVATION NOTES

Observation Date and Time: 4-29-20, 10;30 p.m. Caltrans District: 4 County: Marin

Facility Carried: Winwood Place Feature Intersected: Corte Madera Cr Bridge [X] Culvert [ ]

Mill Valley Crossing No: 40 Caltrans Bridge No: _____ Year Built: _____

Total Width: 10' Total Length: 13' No. of Spans (Bridge): 1 No. of Chambers (Culvert): ___

Site Coordinates (Apple iPhone): 37° 54' 44" N & 122° 33' 04" W Weather: Overcast

Street Posted for: Truck Weight Limit [ ] Speed Limit [ ] Nearest Postal Address: No, 193 Winwood Pl

SUPERSTRUCTURE AND TOPSIDE COMPONENTS	DESCRIPTION	CONDITION REMARKS
Superstructure Basics	• Structure Type & Materials: Wood Deck On Concrete • Alignment: Curved [ ] Tangent [X] • Superstructure Depth: 12x4 planks on seven 4x12 beams • Span Lengths: 10' • Waterway Opening Height: 72'± • Skew at Abutments: 0^0 • Curb-to-Curb Width: 10' • Expansion Joints: n/a • Culvert ϕ or Dimensions: n/a	The wood bridge deck is in reasonable shape, no obvious dry rot or fungus. However, connection hardware has started to develop rust. The bridge is for both autos and pedestrians.
Railings, Sidewalks & Curbs	• Railing Type: Wood Left [X] Right [X] • Railing Height: 3'-0" Left [X] Right [X] • Sidewalks on __0__ side(s) • Width of Sidewalk: Left: Right: • Curb Height: n/a • Median Barrier: Yes [ ] No [X]	Wood railing below standard height of 42".
Deck Surface	• AC [ ] Concrete [ ] Wood [X]	
Span Hinges	• None [X]	
Restrainers	At: Abutments [ ] Bents [ ] None [X]	
Soffit Opening Locations	• None [X]	
Traffic Lanes on Bridge	• No. of Traffic Lanes: 1 • Width of Median: n/a • Width of Shoulder, Left: Right:	
Approaches	• Approach Slab at: BB [ ] EB [ ] None [X] • No. of Traffic Lanes 1 • Width of Median: • Width of Shoulder: None Left: Right • Width of Sidewalk: None Left: Right • Railing Type: Left [ ] Right [ ] • Railing Height: Left: Right:	

SUBSTRUCTURE AND UNDERSIDE COMPONENTS	DESCRIPTION	CONDITION REMARKS
Abutments Types & Wingwalls	• Abutment Types: Conc • Integral wingwalls [X] Headwalls [ ]	Downstream left wingwall is stacked rock and on the right cemented rock
Bent	• Materials: • Number of bents: • Pier Wall Type [ ] Column Type [ ] • X-sectional Dimensions: • Skew at Bents:	n/a
Piling	• Not Visible [X] Pile Type: • Pile Extension:	
Abutment and/or Bent Footings n/a	• Footings: Visible [ ] Not Visible [X] • Invert slab: Yes [ ] No [X]	Sour is present at the abutments
Embankment Condition and Erosion Control Measures	At three quadrants the embankments are very stable due to use of cemented rock retaining walls (may not be seismically stable, though).	
Road Under the Bridge	• None [ ] • No. of Traffic Lanes: • Width of Median: • Width of Shoulder: Left: Right • Width of Sidewalk: Left: Right	n/a

MISCELLANEOUS FEATURES	DESCRIPTION	REMARKS
Evidence of Previous Work	[ ] Seismic Retrofit [ ] Rehab & Repairs	Abutments are older, deck is of newer vintage
Visible Utilities	• Gas [X] Water [ ] Sewer [ ] • Electrical [X] Telecommunication [X] • Other Utilities: • Structure Lighting: • Manhole on Deck:	
Availability of Detours	Available for residents but not for their cars	
Drainage Facilities on Structure	• None [X]	
Drainage Facilities Under Structure	24” black HDPE downstream right side	
Existing Facilities at Structure	• Retaining Walls: None [ ] Integral [ ] Near Abuts [X]	Masonry wall after short riprap just upstream. Rock walls downstream
Visual Hydraulic Assessment – Fish Passage	Flow present [X] Fish Spawning Route [ ]	



Photo 3 – View just upstream from the bridge



Photo 4 – Upstream view from the bridge



Photo 5 – Older abutments with rock fortification in front of them and some scour



Photo 6 – Possible rusty runoff stain from a previous steel bridge at opposite abutment



Photo 7 – The joists (stringers) and decking look relatively recent



Photo 8 – Connection hardware has started to corrode



Photo 9 – View of upstream from under the bridge



Photo 10 – View of downstream cemented rock retaining walls



Photo 11 – Street drainage pipe outlets and sacked concrete around them for erosion control



Photo 12 – Utilities alongside of the bridge



Photo 13 – Elevation view of the bridge form upstream



Photo 14 – Evidence of sluice gate in the low check dam upstream



Photo 15 – Masonry retaining wall just upstream of the bridge



Photo 16 – Plaque on the b bridge



Photo 17 – Street signage

MILL VALLEY STRUCTURE NO. 41

STRUCTURE NO. 41 – ELDRIDGE AVENUE BRIDGE OVER ARROYO CORTE MADERA DEL PRESIDIO



Photo 1 - Street Level Looking North



Photo 2 – Street Level Looking West at Corte Madera Avenue

SUMMARY & RECOMMENDATIONS

The Bridge was visually inspected by Nader Tamannaie, PE, on April 29, 2020.

The field notes and photos are recorded in the subsequent pages of this section.

General Observations

1. This is a reinforced concrete earth-filled arch bridge, perhaps between 80 to 100 years old. The bridge follows the typical older construction practice in this area, does not have the highest quality concrete and possibly sits on shallow foundations. There is a multitude of large rock pocket areas in concrete, particularly in the arch foundations, which appear to have become worsened by scour. Sour is also present in the walls and embankments immediately upstream and downstream of the bridge. The railings are too low. Overall the bridge is in less than desirable condition, but functional.
2. There is a large cavity under the approach roadway adjacent to the bridge on the left upstream side, threatening further enlargement and road failure.
3. The retaining walls leading to the bridge in private property on the upstream side are old and in poor condition. Their failures can lead to creek obstruction, flooding and additional embankment damage and scour.

Structure's Qualitative Health & Serviceability Condition Score (0-100): < 35

Qualitative Estimate of Structure's Safe Remaining Life: < 20 years

Recommendations

1. Repair the arch barrel and foundation concrete rock pockets throughout the bridge's underside.
2. Repair the large cavity under the edge of the approach roadway on the right upstream side.
3. Augment the railings to have standard height.

Urgency of Maintenance Needs

1. The cavity under the approach roadway should be repaired right away.
2. The arch barrel concrete repairs should be scheduled in the next five years.
3. Notify the private property owner of the condition of the retaining walls leading to the bridge

Approximate Cost of Rehabilitation or Repairs : $55,000

FIELD OBSERVATION NOTES

Observation Date and Time: 4-29-20, 9;30 p.m. Caltrans District: 4 County: Marin

Facility Carried: Eldridge Ave Feature Intersected: Corte Madera Cr Bridge [X] Culvert [ ]

Mill Valley Crossing No: 41 Caltrans Bridge No: _____ Year Built: _____

Total Width: 18' Total Length: 16' No. of Spans (Bridge): 1 No. of Chambers (Culvert): ___

Site Coordinates (Apple iPhone): 37° 54' 39" N & 122° 32' 58" W Weather: Overcast

Street Posted for: Truck Weight Limit [ ] Speed Limit [ ] Nearest Postal Address: No, 8 Eldridge

SUPERSTRUCTURE AND TOPSIDE COMPONENTS	DESCRIPTION	CONDITION REMARKS
Superstructure Basics	• Structure Type & Materials: RC Filled Arch • Alignment: Curved [ ] Tangent [X] • Superstructure Depth: 2' min and varies • Span Lengths: 8' • Waterway Opening Height: 12'± • Skew at Abutments: 0^0 • Curb-to-Curb Width: 16' • Expansion Joints: n/a • Culvert ϕ or Dimensions: n/a	The bridge concrete is poor in quality, especially its foundation.
Railings, Sidewalks & Curbs	• Railing Type: Conc/wood Left [X] Right [X] • Railing Height: 2'-8" Left [X] Right [X] • Sidewalks on 0 side(s) • Width of Sidewalk: Left: Right: • Curb Height: n/a • Median Barrier: Yes [ ] No [X]	Railing is wood on a a base of 14"-high concrete beam above the deck
Deck Surface	• AC [X] Concrete [ ] Wood [ ]	
Span Hinges	• None [X]	
Restrainers	At: Abutments [ ] Bents [ ] None [X]	
Soffit Opening Locations	• None [X]	
Traffic Lanes on Bridge	• No. of Traffic Lanes: 1 • Width of Median: n/a • Width of Shoulder, Left: Right:	
Approaches	• Approach Slab at: BB [ ] EB [ ] None [X] • No. of Traffic Lanes 1 • Width of Median: • Width of Shoulder: None Left: Right • Width of Sidewalk: None Left: Right • Railing Type: Left [ ] Right [ ] • Railing Height: Left: Right:	

SUBSTRUCTURE AND UNDERSIDE COMPONENTS	DESCRIPTION	CONDITION REMARKS
Abutments Types & Wingwalls	• Abutment Types: Concrete • Integral wingwalls ☐ Headwalls ☒	
Bent n/a	• Materials: • Number of bents: • Pier Wall Type ☐ Column Type ☐ • X-sectional Dimensions: • Skew at Bents:	
Piling	• Not Visible ☒ Pile Type: • Pile Extension:	Arch foundations may been become exposed due to scour.
Abutment and/or Bent Footings n/a	• Footings: Visible ☒ Not Visible ☐ • Invert slab: Yes ☐ No ☒	
Embankment Condition and Erosion Control Measures	The banks immediately adjacent to the bridge are distressed by erosion and instability	
Road Under the Bridge	• None ☒ • No. of Traffic Lanes: • Width of Median: • Width of Shoulder: Left: Right • Width of Sidewalk: Left: Right	

MISCELLANEOUS FEATURES	DESCRIPTION	REMARKS
Evidence of Previous Work	☐ Seismic Retrofit ☒ Rehab & Repairs	Arch ceiling at the entry edge repaired previously
Visible Utilities	• Gas ☒ Water ☒ Sewer ☒ • Electrical ☒ Telecommunication ☒ • Other Utilities: Fire hydrant nearby on West Blithedale Ave • Structure Lighting: • Manhole on Deck:	Sewer pipe attach to the downstream bridge headwall
Availability of Detours	Detour is possible during construction, if bridge closure is needed.	
Drainage Facilities on Structure	Drainage from Corte Madera Ave side daylights over downstream right wingwall. Two other drain pipes are located adjacent to bridge on upstream side. Scupper through top of bridge headwall	
Drainage Facilities Under Structure	Pipe daylights through the arch barrel, contributing to bridge foundation demise	
Existing Facilities at Structure	• Retaining Walls: None ☒ Integral ☐ Near Abuts ☐ X	2 retaining walls upstream scoured and damaged
Visual Hydraulic Assessment & Fish Passage	Flow present ☒ Fish Spawning Route ☐	



Photo 3 – Downstream view from the bridge and flood protection measures by home owner

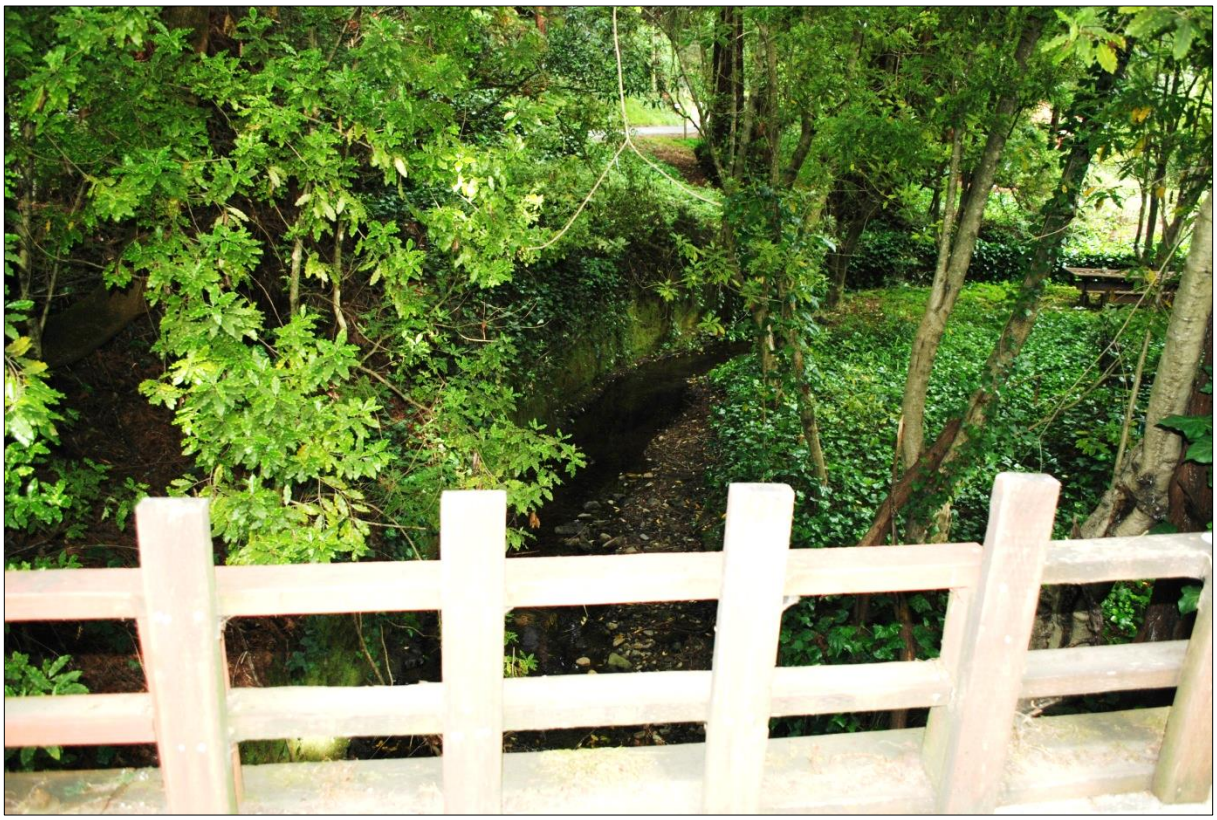

Photo 4 – Upstream view from the bridge



Photo 5 – Upstream view through the bridge



Photo 6 – Downstream view through the bridge



Photo 7 – An example of poor quality concrete at the arch base, as well as concrete abrasion



Photo 8 – Multitude of site drainage pipes, the one through the arch barrel aiding concrete damage



Photo 9 - Poor quality concrete at the base of the arch



Photo 10 – Poor original arch barrel concrete quality



Photo 11 - Evidence of previous work on the arch entry edge



Photo 12 – Scour at the base of the bank and wall adjacent to downstream edge of the bridge



Photo 13 – Large cavity under the approach roadway fill upstream right



Photo 14 – Poor quality original concrete badly damaged right downstream base of the arch



Photo 15 – Long, curved retaining wall upstream right, and a left side wall leading to the bridge



Photo 16 – Scoured base in retaining wall in the private property upstream, leading to the bridge



Photo 17 – Drainage pipe from Corte Madera side street daylighting near bridge wingwall



Photo 18 –Scupper through the top of bridge headwall

MILL VALLEY STRUCTURE NO. 42

STRUCTURE NO. 42 - GARDNER AVE BRIDGE OVER ARROYO CORTE MADERA DEL PRESIDIO CREEK



Photo 1 - Street Level Looking East



Photo 2 - Street Level Looking West

SUMMARY & RECOMMENDATIONS

The Bridge was visually inspected by Manouchehr Mahmoudzadeh, PE, on March 31, 2020, and again by Nader Tamannaie, PE, on April 29, 2020.

The field notes and photos are recorded in the subsequent pages of this section.

General Observations

1. The bridge, an earth-filled reinforced concrete arch, is likely 80-90 years old and of unknown foundations. The AC surfacing is in good condition, but parts of curb on the left side of the road are chipped away There is plenty of vegetation growth on the vertical surfaces of the structure and retaining walls connecting to it on both sides of the bridge. Age, poor quality materials and less than ideal construction practices may be the cause of cracks, fractures, spalls and presence of unsound concrete throughout the structures (bridge and walls). In addition, longitudinal cracks are visible at the bottoms of the arch (inside wall of the culvert) and creek bed concrete invert has chipped and washed away due to scour. Horizontally deep scour is present under the walls connecting on each side of the bridge, as well as under the arch itself.
2. Steel tube railing along right edge of deck is 24” high and considered substandard, but the left side meets the 42” height requirement. The openings through both railings are too wide and pose fall-through hazard.

Structure’s Qualitative Health & Serviceability Condition Score (0-100): < 30

Qualitative Estimate of Structure’s Safe Remaining Life: <15 years

Recommendations

1. Repair the scour under all vertical structural elements (walls, arch ends) and further protect with rock riprap
2. Remove vegetation from structure to inspect and determine extend of cracks, unsound concrete and potential corrosion in the reinforcement; and develop appropriate repair procedure. Clean the DI on the bridge and clear the live berry bush choking the pipe and its outlet at the creek retaining wall.
3. Replace or modify the right railing to comply with barrier and railing safety requirements (42” min. height) when the bridge or barrier is worked on for any reason.

Urgency of Maintenance Needs

Recommended repairs have been listed in the order of priority and the first recommendation has urgency.

Approximate Cost of Rehabilitation or Repairs: $76,000

FIELD OBSERVATION NOTES

Observation Date and Time: 3-31-20, 11:00 a.m. & 4-29-20 Caltrans District: 4 County: Marin

Facility Carried: Gardner Ave Feature Intersected: Arroyo Corte Madera Bridge [X] Culvert [ ]

Mill Valley Crossing No: 42 Caltrans Bridge No: _____ Year Built: _____

Total Width: 29'-0" Total Length: 13'-4" No. of Spans (Bridge): 1 No. of Chambers (Culvert): ____

Site Coordinates (Apple iPhone): 37° 54' 29" N & 122° 32' 32" W Weather: Sunny & Clear

Street Posted for: Truck Weight Limit [ ] Speed Limit [ ] Nearest Postal Address: Corte Madera Ave

SUPERSTRUCTURE AND TOPSIDE COMPONENTS	DESCRIPTION	CONDITION REMARKS
Superstructure Basics	• Structure Type & Materials: RC Filled Arch • Alignment: Curved [ ] Tangent [X] • Superstructure Depth: 3,5'± at arch apex • Span Lengths: 8'- 4"(@ arch base) • Waterway Opening Height: 6'-8"± • Skew at Abutments: 10° ± • Curb-to-Curb Width: 23' • Expansion Joints: n/a • Culvert ϕ or Dimensions: n/a	
Railings, Sidewalks & Curbs	• Railing Type: Pipe rail Left [X] Right [X] • Railing Height: Left 42" Right 24" • Sidewalks on left side(s) • Width of Sidewalk: Left: 4'± Right: • Curb Height: Varies 3"- 9" • Median Barrier: Yes [ ] No: [X]	Right Railing on the bridge is substandard and < 42" in height.
Deck Surface	• AC [X] Concrete [ ] Wood [ ]	
Span Hinges	• None [X]	
Restrainers	At: Abutments [ ] Bents [ ] None [X]	
Soffit Opening Locations	• None [X]	
Traffic Lanes on Bridge	• No. of Traffic Lanes: 2 (One each direction) • Width of Median: None • Width of Shoulder, Left: 8'± Right: None	The left shoulder on bridge and approaches is used for parking
Approaches	• Approach Slab at: BB [ ] EB [ ] None [X] • No. of Traffic Lanes: 2 (One each direction) • Width of Median: None • Width of Shoulder: Left: 8'± Right: • Width of Sidewalk: Left: 4'± Right: 4'± • Railing Type: None Left: Right: • Railing Height: None Left: Right:	

SUBSTRUCTURE AND UNDERSIDE COMPONENTS	DESCRIPTION	CONDITION REMARKS
Abutments Types & Wingwalls	• Abutment Types: Conc • Integral wingwalls [X] and/ or Headwalls [X]	
Bent n/a	• Materials: • Number of bents: • Pier Wall Type [ ] Column Type [ ] • X-sectional Dimensions: • Skew at Bents:	
Piling	• Not Visible [X] Pile Type: • Pile Extension:	
Abutment and/or Bent Footings	• Footings: Visible [ ] Not Visible [X] • Invert slab: Yes [X] No [ ]	Only edge remnants of the invert remain and most of invert in creek bed is damaged by scour and washed away
Embankment Condition and Erosion Control Measures	Retaining walls on all 4 sides. Approach embankments are thus stable	
Road Under the Bridge	• None [X] • No. of Traffic Lanes: • Width of Median: • Width of Shoulder: Left: Right • Width of Sidewalk: Left: Right	

MISCELLANEOUS FEATURES	DESCRIPTION	REMARKS
Evidence of Previous Work	[ ] Seismic Retrofit [ ] Rehab & Repairs	
Visible Utilities	• Gas [X] Water [X] Sewer [X] • Electrical [X] Telecommunication [X] • Other Utilities: • Structure Lighting: • Manhole on Deck:	
Availability of Detours	Detour possible	
Drainage Facilities on Structure	• None [X]	
Drainage Facilities Under Structure	None [X]	
Existing Facilities at Structure	• Retaining Walls: None [ ] Integral [X] Near Abuts [X]	The creek is highly channelized by walls and invert slab
Visual Hydraulic Assessment – Fish Passage	Flow present [X] Fish Spawning Route [ ]	



Photo 3 – View of Substructure & Creek bed Looking North



Photo 4 – Sub-structure & Creek bed Looking South



Photo 5 – View of substandard railing, posing fall-through hazard (opposite railing similar)



Photo 6 – Breakage of connected retaining wall upstream, scoured under with broken pieces



Photo 7 – Stone retaining wall, upstream left



Photo 8 – Connected retaining wall, downstream left. This creek reach is highly channelized



Photo 9 – DI at the bridge, all filled in (see below)



Photo 10 – The other end of DI, at the outlet, being choked by a berry bush & should be cleaned



Photo 11 – Scour present under all connecting retaining walls, as well as bridge supports



Photo 12 – More scur under retaining wall



Photo 13 – Upstream, looking at bridge, with an assorted collection of walls leading to bridge



Photo 14 – View through bridge and two utility pipes. Two vintages of construction are evident



Photo 15 – Broken invert slab and scoured arch end supports on both sides



Photo 16 – View through bridge from downstream end



Photo 17 – More evidence of dangerous scour



Photo 18 – Drainage through arch top

MILL VALLEY STRUCTURE NO. 43

STRUCTURE NO. 43 - THROCKMORTON AVENUE BRIDGE OVER ARROYO CORTE MADERA DEL PRESIDIO



Photo 1 - Street Level Looking East



Photo 2 - Street Level Looking West

SUMMARY & RECOMMENDATIONS

The Bridge was visually inspected by Manouchehr Mahmoudzadeh, PE, on March 31, 2020 and by Nader Tamannaie, PE, on 5-27-2020.

The field notes and photos are recorded in the subsequent pages of this section.

General Observations

The bridge is a collection of three or four generations of bridge construction and widening at the location. The channel runs under a one-story commercial building on the north side of the road. Depending on the vintage of construction, it is composed of reinforced concrete slab, beam and filled arch sections, even wood decking within a private commercial property. The original construction is likely over 80 years old. The bridge foundations are of unknown construct. Beams, deck segments and walls below are damaged throughout. Unsound concrete is visible at the edge of soffit and face of abutments. The AC surfacing is moderately cracked and has been patched a few times.

Metal tube railing along right edge of deck (south side) is 34” high and considered sub-standard since it serves pedestrians.

Parts of this structure have buildings on them, The division of public/private ownership must be determined.

Structure’s Qualitative Health & Serviceability Condition Score (0-100): < 40

Qualitative Estimate of Structure’s Safe Remaining Life: < 30 years

Recommendations

1. Replace or augment the railing to comply with common safe height requirements (42” min) when the railing or bridge is worked on for any reason.
2. Survey and patch unsound concrete, spalls and cracks throughout the super- and substructure. A complete encasement of the substructure in 6” reinforced concrete (shotcreted) would be most effective.
3. Remove & replace AC surfacing.

Urgency of Maintenance Needs

Recommended repairs have been listed in the order of priority and should be done in the next five to ten years.

Approximate Cost of Rehabilitation or Repairs: $90,000

FIELD OBSERVATION NOTES

Observation Date and Time: 3-31-20, 11:35 a.m. & 5-27-20 a.m. Caltrans District: 4 County: Marin
Facility Carried: Throckmorton Ave Feature Intersected: Arroyo Corte Madera Bridge [X] Culvert [ ]
Mill Valley Crossing No: 43 Caltrans Bridge No: _____ Year Built: _____
Total Width: 63'-4" Total Length: 16'-10" No. of Spans (Bridge): 1 No. of Chambers (Culvert): ___
Site Coordinates (Apple iPhone): 37° 54' 24" N & 122° 32' 50" W Weather: Sunny & Clear
Street Posted for: Truck Weight Limit [ ] Speed Limit [ ] Nearest Postal Address: #57 Throckmorton

SUPERSTRUCTURE AND TOPSIDE COMPONENTS	DESCRIPTION	CONDITION REMARKS
Superstructure Basics	• Structure Type & Materials: Combination of RC Slab, Beam, Wood and Filled Arch • Alignment: Curved [ ] Tangent [X] • Superstructure Depth: 16" • Span Lengths: 15'-10" • Waterway Opening Height: 7'-4"± • Skew at Abutments: 30° ± • Curb-to-Curb Width: 43'-4" • Expansion Joints: n/a • Culvert ϕ or Dimensions: n/a	RC = Reinforced concrete
Railings, Sidewalks & Curbs	• Railing Type: Metal tube Left [ ] Right [X] • Railing Height: Left: 42" Right: 36" • Sidewalks on both side(s) • Width of Sidewalk: Left: 10' Right: 10' • Curb Height: varies 6"- 9" • Median Barrier: Yes [ ] No: [X]	RT Railings on the bridge is substandard <42" in height.
Deck Surface	• AC [X] Concrete [ ] Wood [ ]	
Span Hinges	• None [X]	
Restrainers	At: Abutments [ ] Bents [ ] None [X]	
Soffit Opening Locations	• None [X]	
Traffic Lanes on Bridge	• No. of Traffic Lanes: 2 • Width of Median: • Width of Shoulder: Left: 7'-9" Right: 8'-0"	
Approaches	• Approach Slab at: BB [ ] EB [ ] None [X] • No. of Traffic Lanes: 2 • Width of Median: None • Width of Shoulder: Left: 7'-9" Right: 8'-0" • Width of Sidewalk: Left: 10'± Right: 10'± • Railing Type: None Left: Right: • Railing Height: None Left: Right:	

SUBSTRUCTURE AND UNDERSIDE COMPONENTS	DESCRIPTION	CONDITION REMARKS
Abutments Types & Wingwalls	• Abutment Types: Conc • Integral wingwalls [X] and/ or Headwalls: [ ]	
Bent	• Materials: • Number of bents: • Pier Wall Type [ ] Column Type [ ] • X-sectional Dimensions: • Skew at Bents:	
Piling	• Not Visible [X] Pile Type: • Pile Extension:	
Abutment and/or Bent Footings	• Footings: Visible [ ] Not Visible [X] • Invert slab: Yes [ ] No [ ]	
Embankment Condition and Erosion Control Measures	Concrete lining on both sides covered with vegetation.	
Road Under the Bridge	• None [X] • No. of Traffic Lanes: • Width of Median: • Width of Shoulder: Left: Right • Width of Sidewalk: Left: Right	

MISCELLANEOUS FEATURES	DESCRIPTION	REMARKS
Evidence of Previous Work	[ ] Seismic Retrofit [ ] Rehab & Repairs	
Visible Utilities	• Gas [ ] Water [X] Sewer [X] • Electrical [ ] Telecommunication [ ] • Other Utilities: • Structure Lighting: • Manhole on Deck:	
Availability of Detours	Detour possible	
Drainage Facilities on Structure	• E&W side of the bridge	
Drainage Facilities Under Structure	None [X]	
Existing Facilities at Structure	• Retaining Walls: None [ ] Integral [ ] Near Abuts [X]	Canal concrete lining, & Commercial buildings
Visual Hydraulic Assessment – Fish Passage	Flow present [X] Fish Spawning Route [ ]	



Photo 3 – View of substructure looking north



Photo 4 – Bridge railing looking west



Photo 5 – Scour under bridge wingwall



Photo 6 – Under the sidewalk. Header beam (left) is badly spalled, exposing lengths of rusty rebar



Photo 7 – View of badly damaged exterior sidewalk support beam



Photo 8 – Views of both damaged sidewalk beams



Photo 9 - Poor quality deck underside concrete and damage caused by flows from a DI



Photo 10 – Many utility ducts and wet utility pipes cross under the deck with poor patching



Photo 11 – More ducts under the structure



Photo 12 – Multiple generations of bridge construction (perhaps three) at the location are evident



Photo 13 – Another generation of construction ahead and wall abrasion throughout



Photo 14 – Damaged soffit concrete



Photo 15 – Another addition to the bridge in form of wood beam deck (ahead) on commercial property



Photo 16 – Unusual iwall and substructure construction, having reduced flow capacity



Photo 17 – Another unusual feature



Photo 18 – Unusual interior, below-deck bridge framing



Photo 19 – More utilities squeezed in unusual bridge construction



Photo 20 – Underside (soffit) of the wood deck segment located in commercial property



Photo 21 – Storm drain penetration at the base of the abutment wall

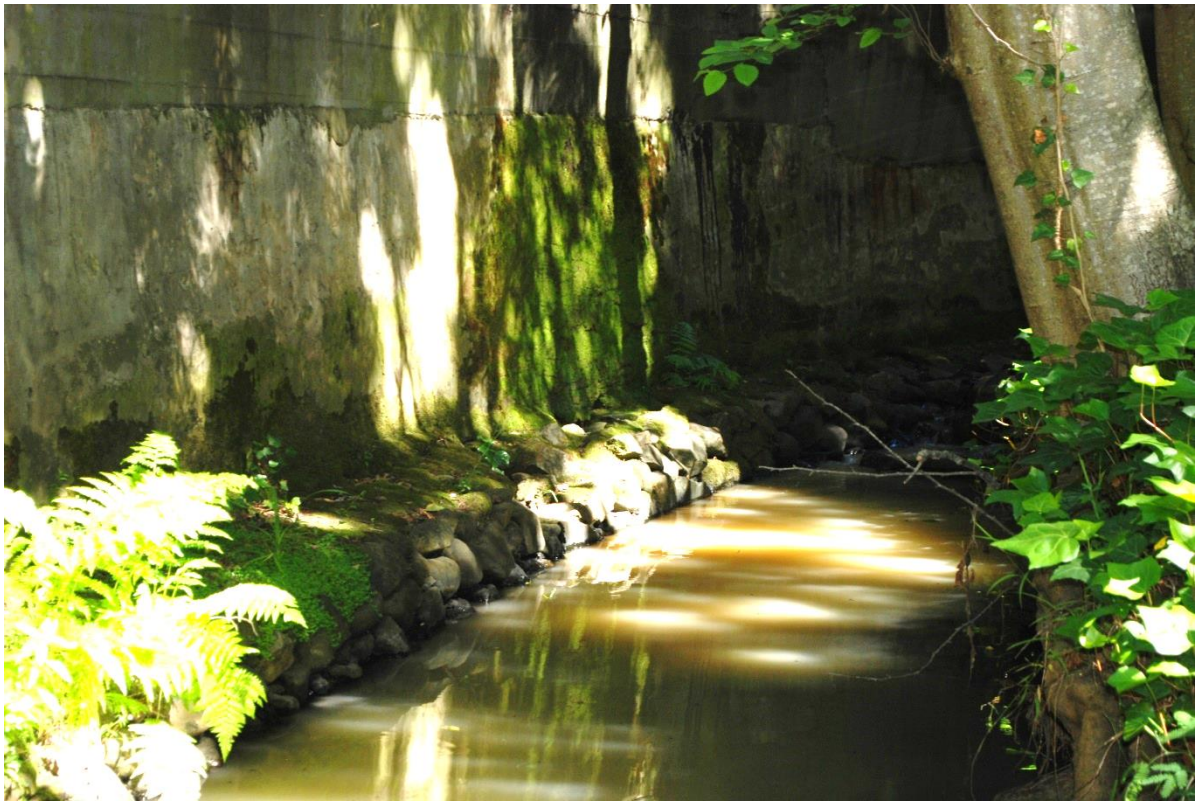

Photo 22 – Flow turbidity encountered just upstream, perhaps caused by nearby construction

MILL VALLEY STRUCTURE NO. 44

STRUCTURE NO. 44 – SUNNYSIDE AVENUE BRIDGE OVER ARROYO CORTE MADERA DEL PRESIDIO



Photo 1 - Street Level Looking East



Photo 2 - Street Level Looking West

SUMMARY & RECOMMENDATIONS

The Bridge was visually inspected by Nader Tamannaie, PE, on April 28, 2020.

The field notes and photos are recorded in the subsequent pages of this section.

General Observations

The bridge, an earth-filled concrete arch with stay-in-place galvanized steel forms, is older but its exact age is unknown. The bridge is of unknown foundations. It is tightly nestled in a mainly commercial part of downtown Mill Valley. There are the usual cracks and minor spalls existing on concrete surfaces but, overall, the bridge is in adequate condition.

The railing heights are inadequate. The AC on the deck is patchy and provides poor quality ride.

Structure's Qualitative Health & Serviceability Condition Score (0-100): < 65

Qualitative Estimate of Structure's Safe Remaining Life: < 40 years

Recommendations

Program the street for repaving in the next 5 years.

Urgency of Maintenance Needs

None.

Approximate Cost of Rehabilitation or Repairs : Bridge deck pavement will be part of street pavement program.

FIELD OBSERVATION NOTES

Observation Date and Time: 4-28-20, 12:30 p.m. Caltrans District: 4 County: Marin

Facility Carried: Sunnyside Avenue Feature Intersected: Arroyo Corte Madera Bridge [X] Culvert [ ]

Mill Valley Crossing No: 44 Caltrans Bridge No: _____ Year Built: _____

Total Width: 60' Total Length: 19'± No. of Spans (Bridge): 1 No. of Chambers (Culvert): _____

Site Coordinates (Apple iPhone): 37° 54' 20" N & 122° 32' 50" W Weather: Sunny & Clear

Street Posted for: Truck Weight Limit [ ] Speed Limit [ ] Nearest Postal Address: #12 Sunnyside

SUPERSTRUCTURE AND TOPSIDE COMPONENTS	DESCRIPTION	CONDITION REMARKS
Superstructure Basics	• Structure Type & Materials: Earth-Filled Concrete Arch • Alignment: Curved [ ] Tangent [X] • Superstructure Depth: 2'-9" min and varies • Span Lengths: 11' • Waterway Opening Height:8'± • Skew at Abutments: 0° • Curb-to-Curb Width: 40' • Expansion Joints: n/a • Culvert ϕ or Dimensions: n/a	Steel stay-in-place arch panels cover the soffit
Railings, Sidewalks & Curbs	• Railing Type: Wood Left [X] Right [X] • Railing Height: 2'-8" Left [X] Right [X] • Sidewalks on 2 side(s) • Width of Sidewalk: Left: 9' Right: 9' • Curb Height: 2" min to 5" • Median Barrier: Yes [ ] No: [X]	Railings look newer and closer to crashworthy type than most City bridge railings
Deck Surface	• AC [X] Concrete [ ] Wood [ ]	
Span Hinges	• None [X]	
Restrainers	At: Abutments [ ] Bents [ ] None [X]	
Soffit Opening Locations	• None [X]	
Traffic Lanes on Bridge	• No. of Traffic Lanes: 2 • Width of Median: None • Width of Shoulder, Left: Right:	
Approaches	• Approach Slab at: BB [ ] EB [ ] None [X] • No. of Traffic Lanes: 2 • Width of Median: None • Width of Shoulder: Left: 8' Right 8' • Width of Sidewalk: Left: 9' Right 8' • Railing Type: None Left [ ] Right [ ] • Railing Height: Left Right:	Shoulders used for parking

SUBSTRUCTURE AND UNDERSIDE COMPONENTS	DESCRIPTION	CONDITION REMARKS
Abutments Types & Wingwalls	• Abutment Types: Concrete • Integral wingwalls [X] and/ or Headwalls: [X]	
Bent	• Materials: • Number of bents: • Pier Wall Type [ ] Column Type [ ] • X-sectional Dimensions: • Skew at Bents:	n/a
Piling	• Not Visible [X] Pile Type: • Pile Extension:	
Abutment and/or Bent Footings	• Footings: Visible [ ] Not Visible [X] • Invert slab: Yes [ ] No [X]	
Embankment Condition and Erosion Control Measures	Creek highly channelized through here	
Road Under the Bridge	• None [X] • No. of Traffic Lanes: • Width of Median: • Width of Shoulder: Left: Right • Width of Sidewalk: Left: Right	

MISCELLANEOUS FEATURES	DESCRIPTION	REMARKS
Evidence of Previous Work	[ ] Seismic Retrofit [ ] Rehab & Repairs	Bridge barrier rails appear more recent than the bridge
Visible Utilities	• Gas [X] Water [X] Sewer [X] • Electrical [X] Telecommunication [X] • Other Utilities: TV • Structure Lighting: • Manhole on Deck:	Vaults exist in the sidewalk on both sides of the bridge near the abutments
Availability of Detours	Detour possible	
Drainage Facilities on Structure	• None [ ] • DIs at each curb	
Drainage Facilities Under Structure		
Existing Facilities at Structure	• Retaining Walls: None [ ] Integral [X] Near Abuts [X]	
Visual Hydraulic Assessment – Fish Passage	Flow present [X] Fish Spawning Route [ ]	



Photo 3 – Downstream view from the bridge railing



Photo 4 – Upstream view



Photo 5 – Strutted channel walls leading to the bridge from upstream



Photo 6 – Bridge is tucked between various residential and commercial structures



Photo 7 - Bridge interior view

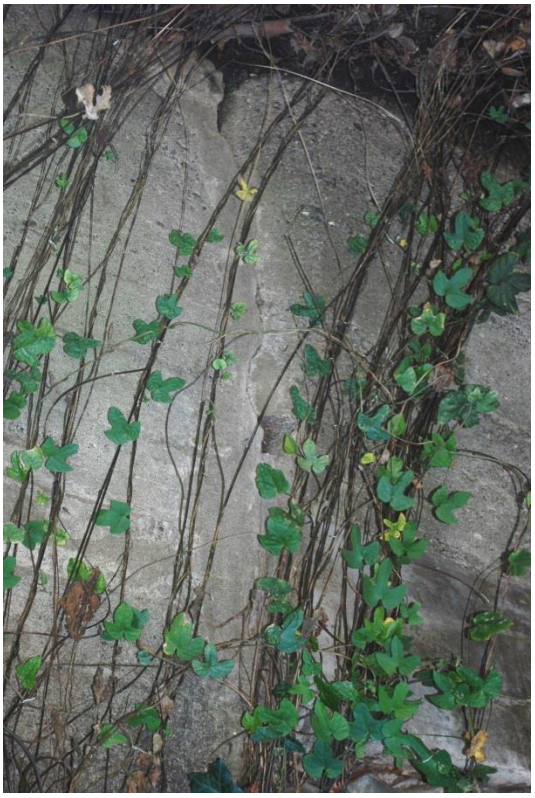

Photo 8 – Large full-height vertical retaining wall crack



Photo 9 – DI on the bridge (there is a similar one on the opposite curb as well)



Photo 10 – Several utilities cross the creek through the bridge

MILL VALLEY STRUCTURE NO. 45

STRUCTURE NO. 45 – MILLER AVENUE AND BUILDINGS OVER CASCADE CREEK



Photo 1 – Alignment of the culvert runs parallel with Miller Ave behind the photographer



Photo 2 – Culvert runs behind the front building where the conifers are, parallel with Miller Ave

SUMMARY & RECOMMENDATIONS

The Bridge was visually inspected by Nader Tamannaie, PE, on June 27, 2020.

The field notes and photos are recorded in the subsequent pages of this section.

General Observations

The division of public and private ownership of this structure should be investigated and verified.

This is the site of a relatively more recent 7'-diamter RCP culvert, constructed under commercial properties at the triangular area of intersection of Miller and Sunnyside Avenues. The RCP segments are a series of 4' rings mortared-together. The RCP's outlet ends up at the same location the RCP through which Cascade Creek flows and ends, constituting the confluence of this creek and Cascade creek.

The RCP segment is in reasonable condition. However, the headwalls are of poor quality concrete. At the outlet, the confluence of the two creeks, the wingwalls and retaining walls are of inferior material quality and badly scoured under, as much as 3'-4' horizontally and one foot vertically.

Structure's Qualitative Health & Serviceability Condition Score (0-100): < 70

Qualitative Estimate of Structure's Safe Remaining Life: < 40 years

Recommendations

1. Repair the scour pockets under the wingwalls/retaining walls at the outlet and protect with rock riprap. Repair the walls with a layer of reinforced shotcrete

Urgency of Maintenance Needs

All recommended action above are urgent and should be scheduled for the next 2-5 years.

Approximate Cost of Rehabilitation or Repairs

Already included for Structure No. 25

FIELD OBSERVATION NOTES

Observation Date and Time: 6-27-20, 112:00 noon Caltrans District: 4 County: Marin

Facility Carried: Bldgs @ Miller/Sunnyside Feature Intersected: Arroyo Corte Madera Bridge ☐ Culvert ☒

Mill Valley Crossing No: 45 Caltrans Bridge No: _____ Year Built: _____

Total Width: _____ Total Length: 115'± No. of Spans (Bridge): _ No. of Chambers (Culvert): 1

Site Coordinates (Apple iPhone): 37° 54' 19" N & 1227° 32' 49" W Weather: Cloudy

Street Posted for: Truck Weight Limit ☐ Speed Limit ☐ Nearest Postal Address: # 33 Miller

SUPERSTRUCTURE AND TOPSIDE COMPONENTS	DESCRIPTION	CONDITION REMARKS
Superstructure Basics	• Structural Type & Materials: RCP • Alignment: Curved ☒ Tangent ☐ • Superstructure Depth: • Span Lengths: • Waterway Opening Height: 7' • Skew at Abutments: 0° • Curb-to-Curb Width: n/a (carries buildings) • Expansion Joints: • Culvert ϕ or Dimensions: 7'	The large culvert is entirely under buildings. The outlet is at the confluence of Cascade Creek and Arroyo Corte Madera
Railings, Sidewalks & Curbs	• Railing Type: None Left Right • Railing Height: Left Right • Sidewalks on _____ side(s) • Width of Sidewalk: Left: Right: • Curb Height: 6" • Median Barrier: Yes ☐ No: ☒	n/a
Deck Surface	• AC ☐ Concrete ☒ Wood ☒	
Span Hinges	• None ☐	n/a
Restrainers	At: Abutments ☐ Bents ☐ None ☐	n/a
Soffit Opening Locations	• None ☐	
Traffic Lanes on Bridge	• No. of Traffic Lanes: • Width of Median: • Width of Shoulder, Left: Right:	n/a
Approaches	• Approach Slab at: BB ☐ EB ☐ None ☐ • No. of Traffic Lanes: • Width of Median: • Width of Shoulder: Left: Right: • Width of Sidewalk: Left: Right: • Railing Type: None Left: Right • Railing Height: Left: Right	n/a

SUBSTRUCTURE AND UNDERSIDE COMPONENTS	DESCRIPTION	CONDITION REMARKS
Abutments Types & Wingwalls	• Abutment Types: Concrete at both ends • Integral wingwalls [X] and/ or Headwalls [X]	
Bent	• Materials: • Number of bents: • Pier Wall Type [ ] Column Type [ ] • X-sectional Dimensions: • Skew at Bents:	n/a
Piling	• Not Visible [ ] Pile Type: • Pile Extension:	n/a
Abutment and/or Bent Footings	• Footings: Visible [ ] Not Visible [ ] • Invert slab: Yes [ ] No [ ]	n/a
Embankment Condition and Erosion Control Measures	Considerable scour at outlet, embankments are stable, held back with retaining walls and solidified stacks of sacks of concrete	
Road Under the Bridge	• None [ ] • No. of Traffic Lanes: • Width of Median: • Width of Shoulder: Left: Right • Width of Sidewalk: Left: Right	n/a

MISCELLANEOUS FEATURES	DESCRIPTION	REMARKS
Evidence of Previous Work		
Visible Utilities	• Gas [ ] Water [ ] Sewer [ ] • Electrical [ ] Telecommunication [ ] • Other Utilities: • Structure Lighting: • Manhole on Deck:	None seen
Availability of Detours	None	
Drainage Facilities on Structure	• None [ ] •	
Drainage Facilities Under Structure		
Existing Facilities at Structure	• Retaining Walls: None [ ] Integral [X] Near Abuts [X]	Shops above the deck
Visual Hydraulic Assessment – Fish Passage	Flow present [X] Fish Spawning Route [X]	Juvenile fish observed at the outlet pool



Photo 3 – Culvert's inlet below buildings. Building flooring is evident on top of photo



Photo 4 – Looking downstream toward culvert's inlet



Photo 5 – Looking upstream from inlet toward Structure No. 44



Photo 6 – Walls upstream of the culvert, looking downstream after Structure No. 44



Photo 7 – Looking upstream from culvert's inlet



Photo 8 – View inside the RCP



Photo 9 – View of downstream at outlet and confluence with Cascade Creek



Photo 10 – View of confluence point from street level



Photo 11 – RCP outlet (left) and point of confluence of Cascade Creek and Arroyo Corte Madera



Photo 12 – Extreme scour under the left wingwall at RCP outlets



Photo 13 – More detailed view of let wingwall scour at outlet



Photo 14 – Poor right wingwall concrete quality at outlets of the two culverts



Photo 15 – View downstream of the two RCPs outlets. Note the scouring of the retaining walls.



Photo 16 – View of the outlets and the retaining walls downstream



Photo 17 – View downstream of right retaining wall and concrete sack fortification



Photo 18 – Cracked headwall at outlet of the two RCPs

MILL VALLEY STRUCTURE NO. 46

STRUCTURE NO. 46 - SUNNYSIDE AVENUE PEDESTRIAN BRIDGE OVER ARROYO CORTE MADERA DEL PRESIDIO



Photo 1 - Street Level Looking North



Photo 2 - Street Level Looking South

SUMMARY & RECOMMENDATIONS

The Bridge was visually inspected by Manouchehr Mahmoudzadeh, PE, on March 31, 2020.

The field notes and photos are recorded in the subsequent pages of this section.

General Observations

The bridge, a timber pedestrian crossing over the creek in the parking lot, is likely over 30 years old. The timber elements and the concrete abutment walls supporting the bridge are fairly good condition.

Structure's Qualitative Health & Serviceability Condition Score (0-100): < 70

Qualitative Estimate of Structure's Safe Remaining Life: < 20 years

Recommendations

Apply sealant to preserve quality of the timber.

Urgency of Maintenance Needs

Applying sealant should be done in the next 5 years and can be done by City maintenance crews.

Approximate Cost of Rehabilitation or Repairs: $5,000

FIELD OBSERVATION NOTES

Observation Date and Time: 3-31-20, 10:00 a.m. Caltrans District: 4 County: Marin

Facility Carried: Pedestrian Crossing Feature Intersected: Arroyo Corte Madera Bridge [X] Culvert [ ]

Mill Valley Crossing No: 46 Caltrans Bridge No: _____ Year Built: _____

Total Width: 5'-0"' Total Length: 13'-6" No. of Spans (Bridge): 1 No. of Chambers (Culvert): _____

Site Coordinates (Apple iPhone): 37° 54' 22" N & 122° 32' 50" W Weather: Sunny & Clear

Street Posted for: Truck Weight Limit [ ] Speed Limit [ ] Nearest Postal Address: Sunnyside & Miller Ave

SUPERSTRUCTURE AND TOPSIDE COMPONENTS	DESCRIPTION	CONDITION REMARKS
Superstructure Basics	• Structure Type & Materials: Timber Pedestrian Bridge on Concrete Walls • Alignment: Curved [ ] Tangent [X] • Superstructure Depth: 8" • Span Lengths: 12'-6" • Waterway Opening Height: 7'± • Skew at Abutments: 0° • Curb-to-Curb Width: 5' (total width) • Expansion Joints: n/a • Culvert ϕ or Dimensions: n/a	
Railings, Sidewalks & Curbs	• Railing Type: Timber Left [X] Right [X] • Railing Height: 3'-6" Left [X] Right [X] • Sidewalks on 0 side(s) • Width of Sidewalk: Left: Right: • Curb Height: n/a • Median Barrier: Yes [ ] No: [X]	
Deck Surface	• AC [ ] Concrete [ ] Wood [X]	
Span Hinges	• None [X]	
Restrainers	At: Abutments [ ] Bents [ ] None [X]	
Soffit Opening Locations	• None [X]	
Traffic Lanes on Bridge	• No. of Traffic Lanes: n/a • Width of Median: • Width of Shoulder, Left: Right:	n/a
Approaches	• Approach Slab at: BB [ ] EB [ ] None [X] • No. of Traffic Lanes: • Width of Median: None • Width of Shoulder: None Left: Right: • Width of Sidewalk: None Left: Right: • Railing Type: None Left: Right: • Railing Height: None Left: Right:	n/a

SUBSTRUCTURE AND UNDERSIDE COMPONENTS	DESCRIPTION	CONDITION REMARKS
Abutments Types & Wingwalls	• Abutment Types: Concrete • Integral wingwalls [X] and/ or headwalls [ ]	Abutments are concrete channel walls
Bent	• Materials: • Number of bents: • Pier Wall Type [ ] Column Type [ ] • X-sectional Dimensions: • Skew at Bents:	**n/a**
Piling	• Not Visible [X] Pile Type: • Pile Extension:	
Abutment and/or Bent Footings	• Footings: Visible [ ] Not Visible [X] • Invert slab: Yes [ ] No [X]	
Embankment Condition and Erosion Control Measures	Concrete channel lining @ all 4 side	
Road Under the Bridge	• None [X] • No. of Traffic Lanes: • Width of Median: • Width of Shoulder: Left: Right • Width of Sidewalk: Left: Right	

MISCELLANEOUS FEATURES	DESCRIPTION	REMARKS
Evidence of Previous Work	[ ] Seismic Retrofit [ ] Rehab & Repairs	
Visible Utilities	• Gas [ ] Water [ ] Sewer [ ] • Electrical [ ] Telecommunication [ ] • Other Utilities: • Structure Lighting: • Manhole on Deck:	
Availability of Detours	Detour possible	
Drainage Facilities on Structure	• None [X]	
Drainage Facilities Under Structure	None	
Existing Facilities at Structure	• Retaining Walls: None [ ] Integral [X] Near Abuts [ ]	Channel concretelined wall
Visual Hydraulic Assessment – Fish Passage	Flow present [X] Fish Spawning Route [ ]	



Photo 3 – View of creek bed looking east



Photo 4 – Substructure looking west

MILL VALLEY STRUCTURE NO. 47

STRUCTURE NO. 47 - MILLER AVENUE W.B. BRIDGE OVER ARROYO CORTE MADERA DEL PRESIDIO



Photo 1 - Street Level Looking East



Photo 2 - Street Level Looking West

SUMMARY & RECOMMENDATIONS

The Bridge was visually inspected by Manouchehr Mahmoudzadeh, PE, on March 31, 2020 and again on May 27, 2020 by Nader Tamannaie, PE.

The field notes and photos are recorded in the subsequent pages of this section.

General Observations

The bridge, a timber beam and deck structure with AC on the deck, is over 50 years old. The superstructure, a series of 22 24" X 7" timber beams and wood plank decking under AC, sits on concrete abutments. The structure foundations are unknown. Various timber components of the structure have developed cracks, and the main stringers have fungus on them and are starting to deteriorate. The timber railing posts have large crack and some have started to hollow out on top due to weathering.

AC surfacing, concrete sidewalk and curbs are in very good condition.

Structure's Qualitative Health & Serviceability Condition Score (0-100): < 65

Qualitative Estimate of Structure's Safe Remaining Life: < 30 years

Recommendations

1. Clean the fungus, spray and treat the main beams and replace any corroded fasteners.
2. Replace cracked and hollowed out timber railing posts.

Urgency of Maintenance Needs

The work on the recommended measures above should be top priority.

Approximate Cost of Rehabilitation or Repairs: $32,000

FIELD OBSERVATION NOTES

Observation Date and Time: 3-31-20, 1:00 p.m. & 5-27-20 a.m. Caltrans District: 4 County: Marin

Facility Carried: Miller Ave (WB) Feature Intersected: Arroyo Corte Madera Bridge [X] Culvert [ ]

Mill Valley Crossing No: 47 Caltrans Bridge No: _____ Year Built: _____

Total Width: 28' Total Length: 19'-6" No. of Spans (Bridge): 1 No. of Chambers (Culvert): _____

Site Coordinates (Apple iPhone): 37° 54' 16" N & 122° 32' 48" W Weather: Sunny & Clear

Street Posted for: Truck Weight Limit [ ] Speed Limit [ ] Nearest Postal Address Vogue Cleaners

SUPERSTRUCTURE AND TOPSIDE COMPONENTS	DESCRIPTION	CONDITION REMARKS
Superstructure Basics	• Structure Type & Materials: 24"X7" undressed timber beams (total 22) • Alignment: Curved [ ] Tangent [X] • Superstructure Depth: 18" • Span Lengths: 18'-6" • Waterway Opening Height: 8.5'± • Skew at Abutments: approx. 10° • Curb-to-Curb Width: 19'-9" • Expansion Joints: n/a • Culvert ϕ or Dimensions: n/a	Timber components are starting to deteriorate. Substructure is in reasonable condition.
Railings, Sidewalks & Curbs	• Railing Type: Timber Left [X] Right [X] • Railing Height: Left 36" Right 48" • Sidewalks on right side(s) • Width of Sidewalk: Left: 0" Right: 4'-2" • Curb Height: 6" • Median Barrier: Yes [ ] No: [X]	Left bridge railing is substandard in height, but ok since it's not next to peds. Some railing posts have deteriorated. Bike lane (plus buffer width) on the right side.
Deck Surface	• AC [X] Concrete [ ] Wood [ ]	
Span Hinges	• None [X]	
Restrainers	At: Abutments [ ] Bents [ ] None [X]	
Soffit Opening Locations	• None [X]	
Traffic Lanes on Bridge	• No. of Traffic Lanes: 2 • Width of Median: • Width of Shoulder, Left: 20" Right: 8'-0"	Right shoulder on bridge is a bike lane plus buffer zone to vehicular traffic
Approaches	• Approach Slab at: BB [ ] EB [ ] None [X] • No. of Traffic Lanes: 2 • Width of Median: None • Width of Shoulder: Left: 20" Right 8'-0" • Width of Sidewalk: Left: 0" Right 8'-0" • Railing Type: Timber Left [X] Right [X] • Railing Height: Left: 36" Right: 48"	• Right shoulder at approach is a bike lane plus buffer width to vehicular traffic. • Left bridge railing is substandard in height, but ok next to ped path.

SUBSTRUCTURE AND UNDERSIDE COMPONENTS	DESCRIPTION	CONDITION REMARKS
Abutments Types & Wingwalls	• Abutment Types: Concrete • Integral wingwalls [X] and/ or Headwalls: [ ]	Signs of scouring under the walls
Bent n/a	• Materials: • Number of bents: • Pier Wall Type [ ] Column Type [ ] • X-sectional Dimensions: • Skew at Bents:	
Piling	• Not Visible [X] Pile Type: • Pile Extension:	
Abutment and/or Bent Footings	• Footings: Visible [ ] Not Visible [X] • Invert slab: Yes [ ] No [ ]	
Embankment Condition and Erosion Control Measures	Channel concrete lining north side of BB & EB Rock slope protection & vegetation south side of EB & BB	BB: Beginning of Bridge EB: End of Bridge
Road Under the Bridge	• None [X] • No. of Traffic Lanes: • Width of Median: • Width of Shoulder: Left: Right • Width of Sidewalk: Left: Right	

MISCELLANEOUS FEATURES	DESCRIPTION	REMARKS
Evidence of Previous Work	[ ] Seismic Retrofit [ ] Rehab & Repairs	Recent approach rail replacement and bridge rail paint
Visible Utilities	• Gas [ ] Water [ ] Sewer [ ] • Electrical [X] Telecommunication [X] • Other Utilities: • Structure Lighting: • Manhole on Deck:	No utility pipes observed under the bridge through the girders
Availability of Detours	Possible (using EB as 2 way)	
Drainage Facilities on Structure	• 2 on south side but clogged up with debris •	
Drainage Facilities Under Structure	None	
Existing Facilities at Structure	• Retaining Walls: None [ ] Integral [ ] Near Abuts [X]	Timber structure on the North side.
Visual Hydraulic Assessment – Fish Passage	Flow present [X] Fish Spawning Route [ ]	



Photo 3 – View of Substructure and substandard railings looking South



Photo 4 – Substructure and vegetation looking North



Photo 5 – Bridge substructure and scour NE corner



Photo 6 – Deteriorated timber railing post



Photo 7 – Retaining wall attached to the bridge downstream, curving with the creek



Photo 8 – View from downstream



Photo 9 – Closer view from downstream



Photo 10 – Fungus on main longitudinal timber beams supporting the deck as well as deck planks



Photo 11 – Closer view of beams having wood fungus growth



Photo 12 – Cracked timber railing post



Photo 13 – Stone retaining wall upstream



Photo 14 – Bridge view upstream

MILL VALLEY STRUCTURE NO. 48

STRUCTURE NO. 48 - MILLER AVE PEDESTRIAN BRIDGE OVER ARROYO CORTE MADERA DEL PRESIDIO



Photo 1 - Street Level Looking East



Photo 2 - Street Level Looking West

SUMMARY & RECOMMENDATIONS

The Bridge was visually inspected by Nader Tamannaie, PE, on May 27, 2020.

The field notes and photos are recorded in the subsequent pages of this section.

General Observations

This is a pedestrian bridge connecting Miller Ave EB to a commercial center on the other side of the creek and presumed to be City-owned and maintained. (This needs to be verified by Public Works.) The structure looks newer than most encountered in the City, but has had boards used for concrete forms instead of plywood, indicating its constructing dating at least to early 1950s. It appears to be piggybacking on preexisting retaining walls on the edge of semi-channelized channel. The structure foundations are unknown.

The superstructure area at the deck level and above look in good condition. However, the soffit (underside of the deck) has concrete rock pockets with rusty rebar showing through. This condition also exists on the surfaces of the two abutments supporting the deck.

Structure's Qualitative Health & Serviceability Condition Score (0-100): < 75

Qualitative Estimate of Structure's Safe Remaining Life: < 40 years

Recommendations

1. Repair the rock pockets in the soffit and on abutment surfaces.
2. Remove old bridge remnants out of the flow way to open it up.

Urgency of Maintenance Needs

The above recommended measurees should be implemented in the next 5 - 10 years.

Approximate Cost of Rehabilitation or Repairs : $28,000

FIELD OBSERVATION NOTES

Observation Date and Time: 5-27-20, 9:00 a.m. Caltrans District: 4 County: Marin

Facility Carried: Pedestrian Walkway Feature Intersected: Arroyo Corte Madera Bridge [X] Culvert [ ]

Mill Valley Crossing No: 48 Caltrans Bridge No: _____ Year Built: _____

Total Width: 16' Total Length: 32' No. of Spans (Bridge): 1 No. of Chambers (Culvert): _____

Site Coordinates (Apple iPhone): 37° 54' 11" N & 122° 36' 6" W Weather: Clear

Street Posted for: Truck Weight Limit [ ] Speed Limit [ ] Nearest Postal Address MV Lumber Co.

SUPERSTRUCTURE AND TOPSIDE COMPONENTS	DESCRIPTION	CONDITION REMARKS
Superstructure Basics	• Structure Type & Materials: • Alignment: Curved [ ] Tangent [X] • Superstructure Depth: 15" • Span Lengths: 32' • Waterway Opening Height: 15'± • Skew at Abutments: approx. 0° • Curb-to-Curb Width: 12' • Expansion Joints: n/a • Culvert ϕ or Dimensions: n/a	
Railings, Sidewalks & Curbs	• Railing Type: Conc/Steel Left [X] Right [X] • Railing Height: 42" Left [X] Right [X] • Sidewalks on ____ side (Ped bridge) • Width of Sidewalk: Left: Right: • Curb Height: • Median Barrier: Yes [ ] No: [X]	
Deck Surface	• AC [ ] Concrete [X] Wood [ ]	
Span Hinges	• None [X]	
Restrainers	At: Abutments [ ] Bents [ ] None [X]	
Soffit Opening Locations	• None [X]	
Traffic Lanes on Bridge n/a	• No. of Traffic Lanes: n/a • Width of Median: • Width of Shoulder, Left: Right:	
Approaches	• Approach Slab at: BB [ ] EB [ ] None [X] • No. of Traffic Lanes: n/a • Width of Median: None • Width of Shoulder: Left: Right • Width of Sidewalk: Left: 0" Right • Railing Type: Timber Left [ ] Right [ ] • Railing Height: Left: Right:	•

SUBSTRUCTURE AND UNDERSIDE COMPONENTS	DESCRIPTION	CONDITION REMARKS
Abutments Types & Wingwalls	• Abutment Types: Concrete • Integral wingwalls [X] and/ or Headwalls: [ ]	
Bent n/a	• Materials: • Number of bents: • Pier Wall Type [ ] Column Type [ ] • X-sectional Dimensions: • Skew at Bents:	
Piling	• Not Visible [X] Pile Type: • Pile Extension:	
Abutment and/or Bent Footings	• Footings: Visible [ ] Not Visible [X] • Invert slab: Yes [ ] No [ ]	
Embankment Condition and Erosion Control Measures	Highly channelized, fairly stable	
Road Under the Bridge	• None [X] • No. of Traffic Lanes: • Width of Median: • Width of Shoulder: Left: Right • Width of Sidewalk: Left: Right	

MISCELLANEOUS FEATURES	DESCRIPTION	REMARKS
Evidence of Previous Work	[ ] Seismic Retrofit [ ] Rehab & Repairs	
Visible Utilities	• Gas [ ] Water [ ] Sewer [ ] • Electrical [X] Telecommunication [X] • Other Utilities: Multiple conduits under the bridge • Structure Lighting: Yes • Manhole on Deck: None	
Availability of Detours	Available	
Drainage Facilities on Structure	None	
Drainage Facilities Under Structure	None	
Existing Facilities at Structure	• Retaining Walls: None [ ] Integral [X] Near Abuts [ ]	
Visual Hydraulic Assessment – Fish Passage	Flow present [X] Fish Spawning Route [ ]	



Photo 3 – Profile view of structure



Photo 4 – West abutment and remnants of previous structure before it in the creek



Photo 5 – View of large structure remnants obstructing the flows



Photo 6 – East abutment area and sedimentation deposited there



Photo 7 – Soffit rock pockets with rusty reinforcement showing through



Photo 8 – Conduits on west abutment wall



Photo 9 – Small conduits above a concrete rock pocket zone on east abutment wall



Photo 10 – Small conduits on edge of deck



Photo 11 – Downstream view



Photo 12 – Upstream view and proximity of adjacent private commercial structure

MILL VALLEY STRUCTURE NO. 49

STRUCTURE NO. 49 - MILLWOOD AVENUE BRIDGE OVER ARROYO CORTE MADERA DEL PRESIDIO



Photo 1 – View of Structure Looking East



Photo 2 - Street Level Looking West

SUMMARY & RECOMMENDATIONS

The Bridge was visually inspected by Manouchehr Mahmoudzadeh, PE, on March 31, 2020 and by Nader Tamannaie, PE, on May 27, 2020.

The field notes and photos are recorded in the subsequent pages of this section.

General Observations

The bridge, a reinforced concrete slab on a concrete abutment on one side and stacked stone wall on the other, is over 50 years old. The bridge has unknown foundations. There are some signs of erosion and scour at the bottom of the abutments and creek bed where the invert slab ends. The railing on the sidewalk side is under standard height for pedestrians.

The AC surfacing is in good condition.

Structure's Qualitative Health & Serviceability Condition Score (0-100): < 60

Qualitative Estimate of Structure's Safe Remaining Life: < 40 years

Recommendations

1. Repair the scour at the base of the abutments and wingwalls.
2. Augment the railing with hand rails to make it 42" high when any other part of the railings require work.

Urgency of Maintenance Needs

The work on the major repairs to the bridge should take place in the next 5-10 years.

Approximate Cost of Rehabilitation or Repairs: $28,000

FIELD OBSERVATION NOTES

Observation Date and Time: 3-31-20, 4:00 p.m. & 5-27-20 a.m. Caltrans District: 4 County: Marin
Facility Carried: Millwood Ave Feature Intersected: Arroyo Corte Madera Bridge [X] Culvert [ ]
Mill Valley Crossing No: 49 Caltrans Bridge No: _____ Year Built: _____
Total Width: 30'-9" Total Length: 19'-9" No. of Spans (Bridge): 1 No. of Chambers (Culvert): _____
Site Coordinates (Apple iPhone): 37° 54' 11" N & 122° 32' 36" W Weather: Sunny & Clear
Street Posted for: Truck Weight Limit [ ] Speed Limit [ ] Nearest Postal Address: #10 Millwood

SUPERSTRUCTURE AND TOPSIDE COMPONENTS	DESCRIPTION	CONDITION REMARKS
Superstructure Basics	• Structure Type & Materials: RC Slab • Alignment: Curved [ ] Tangent [X] • Superstructure Depth: 15" • Span Lengths: 18' • Waterway Opening Height: 11'± • Skew at Abutments: 10° ± • Curb-to-Curb Width: 26' • Expansion Joints: n/a • Culvert ϕ or Dimensions: n/a	Super- and substructure appear in workable condition with some scour at the base of the abutments and wingwall
Railings, Sidewalks & Curbs	• Railing Type: Conc Left: [X] Right: [X] • Railing Height: Left: 36" Right: 32" • Sidewalks on Left side(s) • Width of Sidewalk: Left: 5'-0" Right: 0" • Curb Height: 4" • Median Barrier: Yes [ ] No: [X]	Railings on this bridge are substandard in height, but the height of the side with sidewalk has been augmented in height for pedestrians.
Deck Surface	• AC [X] Concrete [ ] Wood [ ]	
Span Hinges	• None [X]	
Restrainers	At: Abutments [ ] Bents [ ] None [X]	
Soffit Opening Locations	• None [X]	
Traffic Lanes on Bridge	• No. of Traffic Lanes: 2 • Width of Median: • Width of Shoulder, Left: 0" Right: 0"	
Approaches	• Approach Slab at: BB [ ] EB [ ] None [X] • No. of Traffic Lanes: 2 • Width of Median: None • Width of Shoulder: Left: Right: • Width of Sidewalk: Left:5' Right:0" • Railing Type: Timber Left: [ ] Right: [ ] • Railing Height: Left: Right:	

SUBSTRUCTURE AND UNDERSIDE COMPONENTS	DESCRIPTION	CONDITION REMARKS
Abutments Types & Wingwalls	• Abutment Types: Conc • Integral wingwalls [X] and/ or Headwalls: [ ]	
Bent n/a	• Materials: • Number of bents: • Pier Wall Type [ ] Column Type [ ] • X-sectional Dimensions: • Skew at Bents:	
Piling	• Not Visible [X] Pile Type: • Pile Extension:	
Abutment and/or Bent Footings	• Footings: Visible [ ] Not Visible [X] • Invert slab: Yes [X] No [ ]	
Embankment Condition and Erosion Control Measures	The creek is channelized here and the embankments are stable	
Road Under the Bridge	• None [X] • No. of Traffic Lanes: • Width of Median: • Width of Shoulder: Left: Right • Width of Sidewalk: Left: Right	

MISCELLANEOUS FEATURES	DESCRIPTION	REMARKS
Evidence of Previous Work	[ ] Seismic Retrofit [ ] Rehab & Repairs	
Visible Utilities	• Gas [ ] Water [X] Sewer [X] • Electrical [X] Telecommunication [X] • Other Utilities: • Structure Lighting: • Manhole on Deck:	
Availability of Detours	Possible	
Drainage Facilities on Structure	• 2 drain inlets @ each end off the bridge on both sides •	
Drainage Facilities Under Structure	Drain outlet through the abutment	
Existing Facilities at Structure	• Retaining Walls: None [ ] Integral [X] Near Abuts [ ]	
Visual Hydraulic Assessment – Fish Passage	Flow present [X] Fish Spawning Route [ ]	



Photo 3 – View of substructure



Photo 4 – Sidewalk side barrier height increased for pedestrian safety



Photo 5 – View of substructure (the far side bridge)



Photo 6 – Close up of east all-concrete abutment



Photo 7 – Close up of west stone abutment



Photo 8 – Close up of deck soffit



Photo 9 – Invert slab and some scour at the base of one abutment wall



Photo 10 – Exposed invert slab rebar pattern



Photo 9 – End of invert slab and scour drop



Photo 10 – View upstream



Photo 11 – Scoured wingwall base



Photo 12 – Scour at the base of abutment wall



Photo 13 – Storm drain outlet under the deck



Photo 14 – Overhead electrical and telecommunication lines

MILL VALLEY STRUCTURE NO. 51

STRUCTURE NO. 51 - PARK AVENUE BRIDGE OVER ARROYO CORTE MADERA DEL PRESIDIO



Photo 1 – View of Structure Looking East



Photo 2 - Street Level Looking West

SUMMARY & RECOMMENDATIONS

The Bridge was visually inspected by Manouchehr Mahmoudzadeh, PE, on March 31, 2020 and by Nader Tamannaie on May 27, 2020.

The field notes and photos are recorded in the subsequent pages of this section.

General Observations

The bridge, a reinforced concrete filled arched, is upwards of 80 years old. The bridge's concrete, especially in the soffit of its barrel is of poor quality and workmanship throughout, having led to deterioration. There are signs of scour and concrete abrasion at the bottom of the abutments and headwalls. There is a large crack in one of the barrier rails.

The Concrete railings height is less than 36" and is considered substandard. There both adjacent to sidewalks.

The AC surfacing is in very good condition.

Structure's Qualitative Health & Serviceability Condition Score (0-100): < 30

Qualitative Estimate of Structure's Safe Remaining Life: < 30 years

Recommendations

1. Augment the concrete railing to comply with 42" height requirement per safety requirements.
2. Repair the concrete barrier crack to prevent further deterioration.
3. Repair the cracks, rock pockets and abrasion in the concrete, particularly at the base of the arch and headwalls.

Urgency of Maintenance Needs

1. Barriers should be made standard height by install handrails as soon as possible. The crack in the barrier itself should be repaired.
2. Other repairs recommended above should be scheduled for the next 5-10 years.

Approximate Cost of Rehabilitation or Repairs: $32,000

FIELD OBSERVATION NOTES

Observation Date and Time: 3-31-20, 3:20 p.m. & 5-27-20, a.m. Caltrans District: 4 County: Marin

Facility Carried: Park Ave Feature Intersected: Arroyo Corte Madera Bridge [X] Culvert [ ]

Mill Valley Crossing No: 51 Caltrans Bridge No: _____ Year Built: _____

Total Width: 39'-6" Total Length: 16' No. of Spans (Bridge): 1 No. of Chambers (Culvert): _____

Site Coordinates (Apple iPhone): 37° 54' 7" N & 122° 32' 26" W Weather: Sunny & Clear

Street Posted for: Truck Weight Limit [ ] Speed Limit [ ] Nearest Postal Address: Miller Ave

SUPERSTRUCTURE AND TOPSIDE COMPONENTS	DESCRIPTION	CONDITION REMARKS
Superstructure Basics	• Structure Type & Materials: Filled Conc Arch • Alignment: Curved [ ] Tangent [X] • Superstructure Depth: 32" at arch apex • Span Lengths: 12' (at Creek bed level) • Waterway Opening Height: 9'± • Skew at Abutments: 0° • Curb-to-Curb Width: 24'-4" • Expansion Joints: n/a • Culvert ϕ or Dimensions: n/a	Concrete quality is inferior
Railings, Sidewalks & Curbs	• Railing Type: Conc Left: [X] Right: [X] • Railing Height: Left: 3' Right: 3' • Sidewalks on both side(s) • Width of Sidewalk: Left: 5'-8" Right: 7'-0" • Curb Height: 4" • Median Barrier: Yes [ ] No: [X]	Railings on this bridge is substandard in height.
Deck Surface	• AC [X] Concrete [ ] Wood [ ]	
Span Hinges	• None [X]	
Restrainers	At: Abutments [ ] Bents [ ] None [X]	
Soffit Opening Locations	• None [X]	
Traffic Lanes on Bridge	• No. of Traffic Lanes: 2 • Width of Median: • Width of Shoulder, Left: Right:	
Approaches	• Approach Slab at: BB [ ] EB [ ] None [X] • No. of Traffic Lanes: 2 • Width of Median: None • Width of Shoulder: Left: Right: • Width of Sidewalk: Left:5'-8" Right:7'-0" • Railing Type: Left: [ ] Right: [ ] • Railing Height: Left: Right:	

SUBSTRUCTURE AND UNDERSIDE COMPONENTS	DESCRIPTION	CONDITION REMARKS
Abutments Types & Wingwalls	• Abutment Types: Conc • Integral wingwalls [X] and/ or Headwalls: [X]	
Bent n/a	• Materials: • Number of bents: • Pier Wall Type [ ] Column Type [ ] • X-sectional Dimensions: • Skew at Bents:	
Piling	• Not Visible [X] Pile Type: • Pile Extension:	
Abutment and/or Bent Footings	• Footings: Visible [ ] Not Visible [X] • Invert slab: Yes [ ] No [X]	
Embankment Condition and Erosion Control Measures	Rock slope protection & vegetation on all 4 sides	
Road Under the Bridge	• None [X] • No. of Traffic Lanes: • Width of Median: • Width of Shoulder: Left: Right • Width of Sidewalk: Left: Right	

MISCELLANEOUS FEATURES	DESCRIPTION	REMARKS
Evidence of Previous Work	[ ] Seismic Retrofit [ ] Rehab & Repairs	
Visible Utilities	• Gas [ ] Water [X] Sewer [X] • Electrical [X] Telecommunication [X] • Other Utilities: • Structure Lighting: • Manhole on Deck:	
Availability of Detours	Possible	
Drainage Facilities on Structure	• 2 drain inlets @ BB both sides off the bridge	
Drainage Facilities Under Structure	Storm drain outlet	
Existing Facilities at Structure	• Retaining Walls: None [ ] Integral [ ] Near Abuts [ ]	
Visual Hydraulic Assessment – Fish Passage	Flow present [X] Fish Spawning Route [X]	Possible fish migration route as indicated by " No Fishing" sign



Photo 3 – View of headwall with pour quality concrete



Photo 4 – View of arch barrel and storm drain outlet on the left



Photo 5 – Another view of substructure



Photo 6 – Scour at the base of the headwall and arch barrel where they comes together



Photo 7 – View of poor quality abutment concrete and scour at the base



Photo 8 – View of storm drain outlet contributing to concrete deterioration



Photo 9 – Overall poor quality concrete



Photo 10 – Terminated gas line in bridge arch headwall



Photo 11 – Cracked barrier rail



Photo 12 – Signs of fish being present. Barrier next to sidewalk has substandard height



Photo 13 – DI in the deck



Photo 14 – DI and storm drain manhole in the approach area

MILL VALLEY STRUCTURE NO. 54

STRUCTURE NO. 54 - VALLEY CIRCLE PEDESTRIAN BRIDGE OVER ARROYO CORTE MADERA DEL PRESIDIO



Photo 1 – View of Structure looking East



Photo 2 – View of Structure looking West

SUMMARY & RECOMMENDATIONS

The Bridge was visually inspected by Manouchehr Mahmoudzadeh, PE, on March 31, 2020.

The field notes and photos are recorded in the subsequent pages of this section.

General Observations

The bridge, an above deck steel truss, appears over 20 years old. The streel is the rusting type (Corten), not requiring painting. Part of the superstructure is stay-in-place meatal panels filled with reinforced concrete. The bridge is supported on two concrete abutments. However, it is not evident whether the foundation are shallow (footing type) or deep (on piles). There is 5,000-pound weight limit posted on the railing. The bridge is in good condition.

Structure's Qualitative Health & Serviceability Condition Score (0-100): < 90

Qualitative Estimate of Structure's Safe Remaining Life: < 60 years

Recommendations:

None. Overall, the bridge is in good condition.

Urgency of Maintenance Needs

None.

Approximate Cost of Rehabilitation or Repairs : None

FIELD OBSERVATION NOTES

Observation Date and Time: 3-31-20, 6:15 p.m. Caltrans District: 4 County: Marin

Facility Carried: Valley Circle Pedestrian Path Feature Intersected: Reed Creek Bridge [X] Culvert [ ]

Mill Valley Crossing No: 54 Caltrans Bridge No: _____ Year Built: _____

Total Width: 4'-8" Total Length: 46'-0" No. of Spans (Bridge): 1 No. of Chambers (Culvert): _____

Site Coordinates (Apple iPhone): 37° 53' 45" N & 122° 32' 2" W Weather: Sunny & Clear

Street Posted for: Weight Limit [X] Speed Limit [ ] Nearest Postal Address: 469 Miller Ave

SUPERSTRUCTURE AND TOPSIDE COMPONENTS	DESCRIPTION	CONDITION REMARKS
Superstructure Basics	• Structure Type & Materials: Structural Steel Truss • Alignment: Curved [ ] Tangent [X] • Superstructure Depth: 8" • Span Lengths: 46'-0" • Waterway Opening Height: 7'± • Skew at Abutments: approx. 15° • Curb-to-Curb Width: n/a • Expansion Joints: n/a • Culvert ϕ or Dimensions: n/a	Superstructure is above-deck steel truss with intermediate floor beams and concrete deck poured in stay-in-place steel forms
Railings, Sidewalks & Curbs	• Railing Type: Left: [x] Right: [x] • Railing Height: Left:3'-9" Right:3'-9" • Sidewalks on __side(s) • Width of Sidewalk: n/a Left: Right: • Curb Height: n/a • Median Barrier: Yes: [ ] No: [X]	
Deck Surface	• AC [ ] Concrete [X] Wood [ ]	
Span Hinges	• None [X]	
Restrainers	At: Abutments [ ] Bents [ ] None [X]	
Soffit Opening Locations	• None [X]	
Traffic Lanes on Bridge	• No. of Traffic Lanes: n/a/ (ped. bridge) • Width of Median: • Width of Shoulder Left: Right:	
Approaches	• Approach Slab at: BB [ ] EB [ ] None [X] • No. of Traffic Lanes: n/a/ (ped. bridge) • Width of Median: None • Width of Shoulder: Left: Right: • Width of Sidewalk: Left: Right: • Railing Type: Left: [ ] Right: [ ] • Railing Height: Left: Right:	

SUBSTRUCTURE AND UNDERSIDE COMPONENTS	DESCRIPTION	CONDITION REMARKS
Abutments Types & Wingwalls	• Abutment Types: Concrete • Integral wingwalls ☐ and / or Headwalls: ☐	Steel end-diaphragm and plate bearings on Concrete seat
Bent n/a	• Materials: • Number of bents: • Pier Wall Type ☐ Column Type ☐ • X-sectional Dimensions: • Skew at Bents:	
Piling	• Not Visible ☒ Pile Type: • Pile Extension:	
Abutment and/or Bent Footings	• Footings: Visible ☐ Not Visible ☒ • Invert slab: Yes ☐ No ☐	
Embankment Condition and Erosion Control Measures	Rock slope & vegetation all 4 sides	
Road Under the Bridge	• None ☒ • No. of Traffic Lanes: • Width of Median: • Width of Shoulder: Left: Right • Width of Sidewalk: Left: Right	

MISCELLANEOUS FEATURES	DESCRIPTION	REMARKS
Evidence of Previous Work	☐ Seismic Retrofit ☐ Rehab & Repairs	
Visible Utilities	• Gas ☐ Water ☐ Sewer ☐ • Electrical ☐ Telecommunication ☐ • Other Utilities: • Structure Lighting: • Manhole on Deck:	No utilities seem to be attached to the bridge
Availability of Detours	Possible	
Drainage Facilities on Structure	•	
Drainage Facilities Under Structure	Near southern end of the bridge and Miller Ave	
Existing Facilities at Structure	• Retaining Walls: None ☐ Integral ☐ Near Abuts ☐	
Visual Hydraulic Assessment – Fish Passage	Flow present ☒ Fish Spawning Route ☐	



Photo 3 – Profile view of bridge, looking south



Photo 4 – Metal decking soffit, looking south



Photo 5 – Metal soffit decking and north abutment



Photo 6 – Bearing plate at abutment (detail similar at both bridge ends)



Photo 7 – Weight limit sign posted



Photo 8 – Confluence of Arroyo Corte Madera and Reed Creek

MILL VALLEY STRUCTURE NO. 55

STRUCTURE NO. 55 - OLD RAILROAD GRADE FIRE ROAD OVER ARROYO CORTE MADERA DEL PRESIDIO TRIBUTARY



Photo 1 - Trail Level Walking East



Photo 2 - Trail Level Walking West

SUMMARY & RECOMMENDATIONS

The Bridge was visually inspected by Nader Tamannaie, PE, on June 12, 2020.

The field notes and photos are recorded in the subsequent pages of this section.

General Observations

This is the site of the Old Railroad Grade Fire Road crossing a ravine with seasonal flows tributary to Arroyo Corte Madera. It's a 60"-diameter black HDPE pipe of recent vintage but unknown construction date. Two additional but smaller culverts earlier ahead on the fire road were observed and documented as well. (One has a small green paddle-type sign saying: R1, followed by 14 below those characters.) it is anticipated that each time the trail crosses a small and large ravine, such facilities would be in place and many more are expected on the trails around the city. The maintenance authority and operational responsibility for the culvert is unknown as of this report.

The culvert's inlet is loosely fortified with small rocks around three sides. The flow line steepens in the culvert such the outlet ends up well down the trail's support embankment over the gully. The way to the outlet is heavily overgrown and tough to negotiate and, for this reason, it is unknown whether the outlet area is fortified to avoid erosion. The culvert appears to be in reasonable condition, but slight crushing, in the form of the culvert section, changing from circular to a slight oval/elliptical, may be present.

Structure's Qualitative Health & Serviceability Condition Score (0-100): < 80

Qualitative Estimate of Structure's Safe Remaining Life: < 40

Recommendations

None

Urgency of Maintenance Needs

None

Approximate Cost of Rehabilitation or Repairs: None

FIELD OBSERVATION NOTES

Observation Date and Time: 6-12-20, 10:40 a.m. Caltrans District: 4 County: Marin

Facility Carried: Old RR Grade Fire Rd Feature Intersected: Trib. to Arroyo C.M. Bridge ☐ Culvert ☒

Mill Valley Crossing No: 55 Caltrans Bridge No: _____ Year Built: _____

Total Width: _____ Total Length: 100'± No. of Spans (Bridge): ____ No. of Chambers (Culvert): 1

Site Coordinates (Apple iPhone): 37° 55' 28" N & 1227° 33' 50" W Weather: Semi-cloudy

Street Posted for: Truck Weight Limit ☐ Speed Limit ☐ Nearest Postal Address: ~ ½ mi. of trailhead

SUPERSTRUCTURE AND TOPSIDE COMPONENTS	DESCRIPTION	CONDITION REMARKS
Superstructure Basics	• Structural Type & Materials: 60" HDPE Culvert • Alignment: Curved ☐ Tangent ☒ • Superstructure Depth: • Span Lengths: • Waterway Opening Height: • Skew at Abutments: • Curb-to-Curb Width: 16'± trail • Expansion Joints: • Culvert ϕ or Dimensions: 60"	Culvert inlet outlet elevations differ by as much as 20'
Railings, Sidewalks & Curbs	• Railing Type: Left Right • Railing Height: Left Right • Sidewalks on _____ side(s) • Width of Sidewalk: Left: Right: • Curb Height: • Median Barrier: Yes ☐ No: ☐	n/a
Deck Surface	• AC ☐ Concrete ☐ Wood ☐	16'± wide dirt trail and fire road on top of culvert
Span Hinges	• None ☐	n/a
Restrainers	At: Abutments ☐ Bents ☐ None ☐	n/a
Soffit Opening Locations	• None ☐	n/a
Traffic Lanes on Bridge	• No. of Traffic Lanes: • Width of Median: • Width of Shoulder, Left: Right:	n/a
Approaches	• Approach Slab at: BB ☐ EB ☐ None ☒ • No. of Traffic Lanes: • Width of Median: • Width of Shoulder: Left: Right • Width of Sidewalk: Left: Left • Railing Type: Left: Right • Railing Height: Left: Right	Dirt trail for foot traffic and fire road

SUBSTRUCTURE AND UNDERSIDE COMPONENTS	DESCRIPTION	CONDITION REMARKS
Abutments Types & Wingwalls	• Abutment Types: • Integral wingwalls ☐ and/ or Headwalls: ☐	n/a
Bent	• Materials: • Number of bents: • Pier Wall Type ☐ Column Type ☐ • X-sectional Dimensions: • Skew at Bents:	n/a
Piling	• Not Visible ☐ Pile Type: • Pile Extension:	n/a
Abutment and/or Bent Footings	• Footings: Visible ☐ Not Visible ☐ • Invert slab: Yes ☐ No ☐	n/a
Embankment Condition and Erosion Control Measures	Rocky creek and steep but stable wooded gully embankment upstream. Downstream conditions are similar.	
Road Under the Bridge	• None ☐ • No. of Traffic Lanes: • Width of Median: • Width of Shoulder: Left: Right • Width of Sidewalk: Left: Right	n/a

MISCELLANEOUS FEATURES	DESCRIPTION	REMARKS
Evidence of Previous Work	None other than original construction	
Visible Utilities	• Gas ☐ Water ☐ Sewer ☐ • Electrical ☐ Telecommunication ☐ • Other Utilities: • Structure Lighting: • Manhole on Deck:	n/a
Availability of Detours		Future replacement would require trail closure
Drainage Facilities on Structure	• None ☐ •	n/a
Drainage Facilities Under Structure	None	
Existing Facilities at Structure	• Retaining Walls: None ☒ Integral ☐ Near Abuts ☐	
Visual Hydraulic Assessment – Fish Passage	Flow present ☒ Fish Spawning Route ☐	Very slight flow



Photo 3 – The gully just upstream of the culvert inlet and trail crossing



Photo 4 – Culvert's inlet



Photo 5 – The gully just downstream of the trail crossing and culvert outlet (in red circle)



Photo 6 – View through the culvert



Photo 7 – Headwall at culvert inlet and a slight flow



Photo 8 – Marker for another drainage culvert of smaller diameter further west on the trail

MILL VALLEY STRUCTURE NO. 63

STRUCTURE NO. 63 - CAMINO ALTO AVENUE BRIDGE OVER RYAN CREEK



Photo 1 – Street view of Structure Location Looking East



Photo 2 - Street view of Structure Location Looking West

SUMMARY & RECOMMENDATIONS

The Bridge was visually inspected by Manouchehr Mahmoudzadeh, PE, on March 31, 2020 and by Nader Tamannaie, PE, on May 27, 2020.

The field notes and photos are recorded in the subsequent pages of this section.

General Observations

The reinforced concrete slab bridge is between 40 and 50 years old and of unknown foundations. The creek's alignment takes a sharp turn toward NE direction from the bridge's location and, since the bridge is close to the Bay, it experiences tidal backflows. The bridge's visible concrete, AC surfacing, sidewalks & curb are in good condition.

Structure's Qualitative Health & Serviceability Condition Score (0-100): < 75

Qualitative Estimate of Structure's Safe Remaining Life: < 50 years

Recommendations

None

Urgency of Maintenance Needs

None

Approximate Cost of Rehabilitation or Repairs: None

FIELD OBSERVATION NOTES

Observation Date and Time: 3-31-20, 5:10 p.m. & 5-27-20 A.M. Caltrans District: 4 County: Marin
Facility Carried: Camino Alto Ave Feature Intersected: Ryan Creek Bridge [X] Culvert [ ]
Mill Valley Crossing No: 63 Caltrans Bridge No: _ Year Built:___
Total Width: 90'-0" Total Length: 12'-0" No. of Spans (Bridge): 1 No. of Chambers (Culvert):____
Site Coordinates (Apple iPhone): 37° 53' 52" N & 122° 32' 48" W Weather: Sunny & Clear
Street Posted for: Truck Weight Limit [ ] Speed Limit [ ] Nearest Postal Address: Sycamore Ave

SUPERSTRUCTURE AND TOPSIDE COMPONENTS	DESCRIPTION	CONDITION REMARKS
Superstructure Basics	• Structure Type & Materials: RC slab • Alignment: Curved [ ] Tangent [X] • Superstructure Depth: 18" • Span Lengths: 10'-0" • Waterway Opening Height: 5' • Skew at Abutments: 30° ± • Curb-to-Curb Width: 30'± in each direction • Expansion Joints: n/a • Culvert ϕ or Dimensions: n/a	Visible bridge super- and substructure concrete appear to be in good condition.
Railings, Sidewalks & Curbs	• Railing Type: Wood Left [X] Right [X] • Railing Height: 2'-6"± Left: [X] Right: [X] • Sidewalks on both side(s) • Width of Sidewalk: Left: 5'± Right: 5'± • Curb Height: 6" • Median Barrier: Yes: [ ] No: [X]	Railing heights are substandard.
Deck Surface	• AC [X] Concrete [ ] Wood [ ]	
Span Hinges	• None [X]	
Restrainers	At: Abutments [ ] Bents [ ] None [X]	
Soffit Opening Locations	• None [X]	
Traffic Lanes on Bridge	• No. of Traffic Lanes: 2 each direction + bike • Width of Median:14' • Width of Shoulder, Left: 7'-9" Right: 6'-6"	Median earth material with trees and other greens, bound by concrete curbs
Approaches	• Approach Slab at: BB [ ] EB [ ] None [X] • No. of Traffic Lanes: 2 each direction + bike • Width of Median: 14' • Width of Shoulder: None Left: Right: • Width of Sidewalk: Left: 5' Right: 5' • Railing Type: Non Left: [ ] Right: [ ] • Railing Height: n/a Left: Right:	Approach road configuration is the same as the bridge area

SUBSTRUCTURE AND UNDERSIDE COMPONENTS	DESCRIPTION	CONDITION REMARKS
Abutments Types & Wingwalls	• Abutment Types: Conc • Integral wingwalls [X] and / or Headwalls: [ ]	
Bent n/a	• Materials: • Number of bents: • Pier Wall Type [ ] Column Type [ ] • X-sectional Dimensions : • Skew at Bents: <	
Piling	• Not Visible [X] Pile Type: • Pile Extension:	
Abutment and/or Bent Footings	• Footings: Visible [ ] Not Visible [X] • Invert slab: Yes [ ] No [ ]	
Embankment Condition and Erosion Control Measures	Mostly natural ground & vegetation; and some sand bags west side of bridge beginning, all stable	
Road Under the Bridge	• None [X] • No. of Traffic Lanes: • Width of Median: • Width of Shoulder: Left: Right • Width of Sidewalk: Left: Right	

MISCELLANEOUS FEATURES	DESCRIPTION	REMARKS
Evidence of Previous Work	[ ] Seismic Retrofit [ ] Rehab & Repairs	
Visible Utilities	• Gas [X] Water [X] Sewer [X] • Electrical [X] Telecommunication [X] • Other Utilities: • Structure Lighting: • Manhole on Deck:	6” utility line along right edge of bridge appears to be gas. Water, sewer, electrical and other utilities are assumed to be underground.
Availability of Detours	Possible	
Drainage Facilities on Structure	•	
Drainage Facilities Under Structure	30”± storm drain line draining under the bridge just inside the upstream end and a mechanically operated outlet gate on the opposite wingwall	
Existing Facilities at Structure	• Retaining Walls: None [ ] Integral [ ] Near Abuts [ ]	
Visual Hydraulic Assessment – Fish Passage	Flow present [X] Fish Spawning Route [ ]	



Photo 3 – View of substructure looking downstream



Photo 4 – Substructure looking upstream



Photo 5 – View of upstream from the bridge



Photo 6 – Substructure looking upstream

MILL VALLEY STRUCTURE NO. 64

STRUCTURE NO. 64 – NELSON AVENUE OVER RYAN CREEK RCB CULVERT



Photo 1 – Street Level Looking South



Photo 2 - Street Level Looking North

SUMMARY & RECOMMENDATIONS

The Bridge was visually inspected by Nader Tamannaie, PE, on June 27, 2020.

The field notes and photos are recorded in the subsequent pages of this section.

General Observations

This is the site of a 30" RCP used to convey the flow from Ryan Creek. The RCP runs in mid-block perpendicular to Nelson Avenue and goes under a block of homes, then under Nelson Avenue where it turns right for nearly 30', turning left to daylight shortly beyond a fence at the back edge of the sidewalk. The outlet is a vault-like concrete structure with an open side for release, where a couple of other street drainpipes also join. The system appears to be in reasonable condition.

Structure's Qualitative Health & Serviceability Condition Score (0-100): < 90

Qualitative Estimate of Structure's Safe Remaining Life: < 50 years

Recommendations

None

Urgency of Maintenance Needs

None

Approximate Cost of Rehabilitation or Repairs

None

FIELD OBSERVATION NOTES

Observation Date and Time: 6-27-20, 3:15 p.m. Caltrans District: 4 County: Marin

Facility Carried: Nelson Avenue Feature Intersected: Ryan Creek Bridge ☐ Culvert ☒

Mill Valley Crossing No: 64 Caltrans Bridge No: _____ Year Built: _____

Total Width: _____ Total Length: 350'± No. of Spans (Bridge): __ No. of Chambers (Culvert): 1

Site Coordinates (Apple iPhone): 37° 53' 57" N & 122° 31' 55" W Weather: Cloudy

Street Posted for: Truck Weight Limit ☐ Speed Limit ☐ Nearest Postal Address: # 57 Nelson

SUPERSTRUCTURE AND TOPSIDE COMPONENTS	DESCRIPTION	CONDITION REMARKS
Superstructure Basics	• Structural Type & Materials: RCP • Alignment: Curved ☐ Tangent ☒ • Superstructure Depth: • Span Lengths: • Waterway Opening Height: • Skew at Abutments: 0° • Curb-to-Curb Width: 30'± • Expansion Joints: • Culvert ϕ or Dimensions: 30"	RCP goes under a block of homes, parallel with Matilda Ave
Railings, Sidewalks & Curbs	• Railing Type: Left: CLF Right • Railing Height: Left 6' Right • Sidewalks on 2 side(s) • Width of Sidewalk: Left: 5' Right: 5' • Curb Height: 6" • Median Barrier: Yes ☐ No: ☒	CLF: Chain link fence
Deck Surface	• AC ☒ Concrete ☐ Wood ☐	AC is in good condition
Span Hinges	• None ☐	n/a
Restrainers	At: Abutments ☐ Bents ☐ None ☐	n/a
Soffit Opening Locations	• None ☐	n/a
Traffic Lanes on Bridge	• No. of Traffic Lanes: 2 • Width of Median: None • Width of Shoulder, Left: Right:	
Approaches	• Approach Slab at: BB ☐ EB ☐ None ☒ • No. of Traffic Lanes: 2 • Width of Median: None • Width of Shoulder: Left: Right: • Width of Sidewalk: Left: 5' Right: 5' • Railing Type: None Left: Right • Railing Height: Left: Right	

SUBSTRUCTURE AND UNDERSIDE COMPONENTS	DESCRIPTION	CONDITION REMARKS
Abutments Types & Wingwalls	• Abutment Types: Concrete • Integral wingwalls [X] and/ or Headwalls [X]	At outlet only
Bent	• Materials: • Number of bents: • Pier Wall Type [ ] Column Type [ ] • X-sectional Dimensions: • Skew at Bents:	n/a
Piling	• Not Visible [ ] Pile Type: • Pile Extension:	n/a
Abutment and/or Bent Footings	• Footings: Visible [ ] Not Visible [ ] • Invert slab: Yes [X] No [ ]	Invert at outlet
Embankment Condition and Erosion Control Measures	Stable	
Road Under the Bridge	• None [ ] • No. of Traffic Lanes: • Width of Median: • Width of Shoulder: Left: Right • Width of Sidewalk: Left: Right	n/a

MISCELLANEOUS FEATURES	DESCRIPTION	REMARKS
Evidence of Previous Work		
Visible Utilities	• Gas [ ] Water [ ] Sewer [ ] • Electrical [X] Telecommunication [X] • Other Utilities: • Structure Lighting: • Manhole on Deck:	Storm drain Dis and culverts nearby and feeding into the 0otlet Vault nearby
Availability of Detours	Available	
Drainage Facilities on Structure	• None [ ] •	n/a
Drainage Facilities Under Structure		n/a
Existing Facilities at Structure	• Retaining Walls: None [X] Integral [ ] Near Abuts [ ]	
Visual Hydraulic Assessment – Fish Passage	Flow present [X] Fish Spawning Route [ ]	Very slight flow present, almost not moving



Photo 3 – Culvert's outlet, looking upstream. An oil sleek was present



Photo 4 – Downstream of the outlet



Photo 5 – Manhole access over the outlet area



Photo 6 – Nearby street DIs of tributary culverts



Photo 7 – Culvert's inlet



Photo 8 – Upstream of the inlet looking toward Amiciata Ave and Structure No. 54



Photo 9 – Multiple culverts coming together at the outlet manhole



Photo 10 – Nearby vault

MILL VALLEY STRUCTURE NO. 65

STRUCTURE NO. 65 – AMICIATA AVENUE OVER RYAN CREEK RCB CULVERTS



Photo 1 – Street Level Looking South



Photo 2 - Street Level Looking North

SUMMARY & RECOMMENDATIONS

The Bridge was visually inspected by Nader Tamannaie, PE, on June 27, 2020.

The field notes and photos are recorded in the subsequent pages of this section.

General Observations

This is the site of 2-12” RCPs under Amiciata Avenue, used to convey the flow from Ryan Creek. The short system appears to be in reasonable condition. However their inlets =are choked with weeds.

Structure’s Qualitative Health & Serviceability Condition Score (0-100): < 90

Qualitative Estimate of Structure’s Safe Remaining Life: < 50 years

Recommendations

Remove the grass and weeds from the culverts’ inlet.

Urgency of Maintenance Needs

Should be done by maintenance crews.

Approximate Cost of Rehabilitation or Repairs

None.

FIELD OBSERVATION NOTES

Observation Date and Time: 6-27-20, 4:30 p.m. Caltrans District: 4 County: Marin

Facility Carried: Amiciata Avenue Feature Intersected: Ryan Creek Bridge ☐ Culvert ☒

Mill Valley Crossing No: 65 Caltrans Bridge No: _____ Year Built: _____

Total Width: _____ Total Length: 34'± No. of Spans (Bridge): __ No. of Chambers (Culvert): 2

Site Coordinates (Apple iPhone): 37° 53' 59" N & 122° 31' 58" W Weather: Cloudy

Street Posted for: Truck Weight Limit ☐ Speed Limit ☐ Nearest Postal Address: # 55 Amiciata

SUPERSTRUCTURE AND TOPSIDE COMPONENTS	DESCRIPTION	CONDITION REMARKS
Superstructure Basics	• Structural Type & Materials: 2 RCPs • Alignment: Curved ☐ Tangent ☒ • Superstructure Depth: • Span Lengths: • Waterway Opening Height: • Skew at Abutments:30° • Curb-to-Curb Width: 20'± • Expansion Joints: • Culvert ϕ or Dimensions: 2 X 12"	
Railings, Sidewalks & Curbs	• Railing Type: Left: Wood Right: Markers • Railing Height: Left 3' Right • Sidewalks on Left side(s) • Width of Sidewalk: Left: 5' Right: • Curb Height: 6" • Median Barrier: Yes ☐ No: ☒	
Deck Surface	• AC ☒ Concrete ☐ Wood ☐	Recent AC resurfacing
Span Hinges	• None ☐	n/a
Restrainers	At: Abutments ☐ Bents ☐ None ☐	n/a
Soffit Opening Locations	• None ☐	n/a
Traffic Lanes on Bridge	• No. of Traffic Lanes: 2 • Width of Median: None • Width of Shoulder, Left: Right:	
Approaches	• Approach Slab at: BB ☐ EB ☐ None ☒ • No. of Traffic Lanes: 2 • Width of Median: None • Width of Shoulder: Left: Right: • Width of Sidewalk: Left: 5' Right: • Railing Type: None Left: Right • Railing Height: Left: Right	

SUBSTRUCTURE AND UNDERSIDE COMPONENTS	DESCRIPTION	CONDITION REMARKS
Abutments Types & Wingwalls	• Abutment Types: None • Integral wingwalls ☐ and/ or Headwalls ☐	
Bent	• Materials: • Number of bents: • Pier Wall Type ☐ Column Type ☐ • X-sectional Dimensions: • Skew at Bents:	n/a
Piling	• Not Visible ☐ Pile Type: • Pile Extension:	n/a
Abutment and/or Bent Footings	• Footings: Visible ☐ Not Visible ☐ • Invert slab: Yes ☒ No ☐	
Embankment Condition and Erosion Control Measures	Very flat, stable	
Road Under the Bridge	• None ☐ • No. of Traffic Lanes: • Width of Median: • Width of Shoulder: Left: Right • Width of Sidewalk: Left: Right	n/a

MISCELLANEOUS FEATURES	DESCRIPTION	REMARKS
Evidence of Previous Work		
Visible Utilities	• Gas ☐ Water ☐ Sewer ☐ • Electrical ☒ Telecommunication ☒ • Other Utilities: • Structure Lighting: • Manhole on Deck:	Storm drain Dis and culverts nearby and feeding into the 0otlet Vault nearby
Availability of Detours	Available	
Drainage Facilities on Structure	• None ☐ •	n/a
Drainage Facilities Under Structure		n/a
Existing Facilities at Structure	• Retaining Walls: None ☒ Integral ☐ Near Abuts ☐	
Visual Hydraulic Assessment – Fish Passage	Flow present ☒ Fish Spawning Route ☐	Very slight flow present, almost not moving



Photo 3 – Looking upstream at the double culverts' inlets



Photo 4 – Downstream of the outlets



Photo 5 – The outlets are choked by weeds even though they have been mowed recently



Photo 6 – DI at outlets

MILL VALLEY STRUCTURE NO. 66

STRUCTURE NO. 66 - VALLEY CIRCLE & MILLER AVENUE CULVERT AT REED CREEK



Photo 1 – Street Level View of Structure's Alignment Looking West at Culvert Outlet



Photo 2 - Street Level View of Culvert Inlet Looking East Behind a Gas Station on Miller Ave

SUMMARY & RECOMMENDATIONS

The Bridge was visually inspected by Manouchehr Mahmoudzadeh, PE, on March 31, 2020.

The field notes and photos are recorded in the subsequent pages of this section.

General Observations

This is a long reinforced concrete box (RCB) culvert with concrete and wood decking segments and an angular alignment. It starts with a single cell opening behind a gas station on Miller Ave, crosses EB Miller Ave, the median, WB Miller Ave and sidewalks before ending with a 2-cell outlet back in the natural creek. The culvert's construction likely dates back 35 to 45 years or more. The AC surfacing, sidewalk and curb are in good condition. The culvert alignment has a sharp turn toward NW direction and ends up as a two-cell structure at the outlet.

There is no railing at inlet edge of deck; and substandard (<40") timber railing at the outlet edge of the culvert.

Structure's Qualitative Health & Serviceability Condition Score (0-100): < 75

Qualitative Estimate of Structure's Safe Remaining Life: < 40 years

Recommendations

1. Install railing at inlet edge of culvert and update the railing at the other end.

Urgency of Maintenance Needs

The recommended work should be scheduled in the next 5 years.

Approximate Cost of Rehabilitation or Repairs: $5,000

FIELD OBSERVATION NOTES

Observation Date and Time: 3-31-20, 5:40 p.m. Caltrans District: 4 County: Marin

Facility Carried: Valley Circle Feature Intersected: Reed Creek Bridge ☐ Culvert ☒

Mill Valley Crossing No: 66 Caltrans Bridge No: _____ Year Built: _____

Total Width: _ Total Length: 292'± No. of Spans (Bridge): __ No. of Chambers (Culvert): 1 to 2

Site Coordinates (Apple iPhone): 37° 53' 44" N & 122° 32' 4" W Weather: Sunny & Clear

Street Posted for: Truck Weight Limit ☐ Speed Limit ☐ Nearest Postal Address: 459 Miller Ave

SUPERSTRUCTURE AND TOPSIDE COMPONENTS	DESCRIPTION	CONDITION REMARKS
Superstructure Basics	• Structure Type & Materials: RCB Culvert • Alignment: Curved ☐ Multi-leg Tangent ☒ • Superstructure Depth: 36" and varies • Span Lengths: 10'-0" & varies • Waterway Opening Height: 32"± • Skew at Abutments: approx. 30° & varies • Curb-to-Curb Width: 40'± in each direction • Expansion Joints: n/a • Culvert ϕ or Dimensions: n/a	This is a long culvert with concrete and wood decking segments and an angular alignment, starting with a single cell opening behind a gas station on Miller Ave, crossing WB Miller Ave, the median, EB Miller Ave and sidewalks before ending with a 2-cell outlet in a natural creek
Railings, Sidewalks & Curbs	• Railing Type: Timber Left: ☐ Right: ☒ • Railing Height: Left: Right: 40" • Sidewalks on both side(s) • Width of Sidewalk: Left:10'± Right: 15'± • Curb Height: 6" & varies • Median Barrier: Yes: ☐ No: ☒	There are no railings @ the Lt edge of the structure
Deck Surface	• AC ☒ Concrete ☐ Wood ☒	
Span Hinges	• None ☒	n/a
Restrainers	At: Abutments ☐ Bents ☐ None ☒	n/a
Soffit Opening Locations	• None ☒	n/a
Traffic Lanes on Bridge	• No. of Traffic Lanes: 2 lanes in each direction • Width of Median: 6' & varies • Width of Shoulder, Left: 8'-0" Right: 8'-10"	Median green area bounded by concrete curbs
Approaches	• Approach Slab at: BB ☐ EB ☐ None ☒ • No. of Traffic 1 lane in WB & 1 bike lane • Width of Median: None • Width of Shoulder: Left: 8' Right: 9' • Width of Sidewalk: Left: 10' Right: 15' • Railing Type: Left: ☐ Right: ☐ • Railing Height: Left: Right:	

SUBSTRUCTURE AND UNDERSIDE COMPONENTS	DESCRIPTION	CONDITION REMARKS
Abutments Types & Wingwalls	• Abutment Types: Conc • Integral wingwalls [X] and / or Headwalls: [ ]	
Bent	• Materials: • Number of bents: • Pier Wall Type [X] Column Type [ ] • X-sectional Dimensions :Rec 30”x8” • Skew at Bents: <5°	
Piling	• Not Visible [X] Pile Type: • Pile Extension:	
Abutment and/or Bent Footings	• Footings: Visible [ ] Not Visible [X] • Invert slab: Yes [ ] No [ ]	
Embankment Condition and Erosion Control Measures	Rock slope & vegetation N. end; and concrete lining S. end.	
Road Under the Bridge	• None [X] • No. of Traffic Lanes: • Width of Median: • Width of Shoulder: Left: Right • Width of Sidewalk: Left: Right	

MISCELLANEOUS FEATURES	DESCRIPTION	REMARKS
Evidence of Previous Work	[ ] Seismic Retrofit [ ] Rehab & Repairs	
Visible Utilities	• Gas [ ] Water [ ] Sewer [ ] • Electrical [ ] Telecommunication [ ] • Other Utilities: • Structure Lighting: • Manhole on Deck:	
Availability of Detours	Possible	
Drainage Facilities on Structure	• 1 in S. half of the bridge, EB Miller Ave	
Drainage Facilities Under Structure	None	
Existing Facilities at Structure	• Retaining Walls: None [ ] Integral [ ] Near Abuts [ ]	
Visual Hydraulic Assessment – Fish Passage	Flow present [X] Fish Spawning Route [ ]	



Photo 3 – Looking NW at the strutted concrete channel upstream of culvert inlet



Photo 4 – Culvert top (gray concrete) through the gas station before crossing Miller Avenue



Photo 5 – Culvert alignment (pedestrian crosswalk) from gas station, crossing Miller Ave median



Photo 6 – Looking from wood-decked segment in the median of Miller Ave



Photo 7 – Another wood decked segment at the end of culvert where it has split to 2 cells



Photo 8 – View of Railing at culvert outlet into natural channel



Photo 9 – Natural channel slope protection at right side after culvert outlet



Photo 10 – Culvert outlet area



Photo 11 – Poor quality original abutment concrete at culvert's outlet



Photo 12 – Drain inlet in EB Miller Ave over the culvert

MILL VALLEY STRUCTURE NO. 67

STRUCTURE NO. 67 - REED AVENUE BRIDGE OVER REED CREEK



Photo 1 – View of Structure Looking North



Photo 2 - Street Level Looking West

SUMMARY & RECOMMENDATIONS

The Bridge was visually inspected by Manouchehr Mahmoudzadeh, PE, on April 24, 2020.

The field notes and photos are recorded in the subsequent pages of this section.

General Observations

The structure, a reinforced concrete box culvert, is over 50 years old. The AC surfacing is in good condition however, curb is cracked. The bridge facilitates a driveway to back parking lot of SMOG shop on Miller Ave.

The gate to the parking lot consists of metal tube & screen; and chain link fence at both edges of the bridge. Concrete at edge of deck and soffit has several cracks, spalls and delamination is observed at SW corner. In addition, there is a major crack, spalled areas with rebar exposed on the vertical face of NE canal concrete lining just East of BB.

The ownership and responsibility for maintenance, due to proximity and course of the property line is not clear. The City ROW (and City limit as well) may be on the street side if the culvert, in which case the structure would be privately owned. If the property line is on the yard side of the culvert, the ownership would be Mill Valley's to be clarified.

Structure's Qualitative Health & Serviceability Condition Score (0-100): < 60

Qualitative Estimate of Structure's Safe Remaining Life: < 40 years

Recommendations

1. Determine the structure ownership and, if it is in the City of Mill Valley ROW, then
    a. Repair all spalls and cracks to improve serviceability of the bridge
    b. Repair curb and clean up debris around edge of deck.

Urgency of Maintenance Needs

The ownership of the culvert, whether it is in the City of Mill Valley, should be established first. Work on the repairs to the small bridge are not critical.

Approximate Cost of Rehabilitation or Repairs : $10,000

FIELD OBSERVATION NOTES

Observation Date and Time: 4-24-20, 4:45 p.m. Caltrans District: 4 County: Marin

Facility Carried: Reed Creek Feature Intersected: Reed Ave Bridge [X] Culvert [ ]

Mill Valley Crossing No: 67 Caltrans Bridge No: _____ Year Built: _____

Total Width: 16'-8" Total Length: 7'-0" No. of Spans (Bridge): _ No. of Chambers (Culvert): 1

Site Coordinates (Apple iPhone): 37° 53' 43" N & 122° 32' 8" W Weather: Sunny & Clear

Street Posted for: Truck Weight Limit [ ] Speed Limit [ ] Nearest Postal Address: # 28 Reed Ave

SUPERSTRUCTURE AND TOPSIDE COMPONENTS	DESCRIPTION	CONDITION REMARKS
Superstructure Basics	• Structure Type & Materials: RCB Culvert • Alignment: Curved [ ] Tangent [X] • Superstructure Depth: 12" and varies • Span Lengths: 5'-6" @ Creek Invert • Waterway Opening Height: 5'± • Skew at Abutments: 0° • Curb-to-Curb Width: 15' • Expansion Joints: n/a • Culvert ϕ or Dimensions: n/a	Cracks & Spalls are visible on various parts of deck, soffit and channel lining.
Railings, Sidewalks & Curbs	• Railing Type: MT Left: [x] Right: [x] • Railing Height: Left: 6' Right: 6' • Sidewalks on __side(s) • Width of Sidewalk: Left:10'± Right: 15'± • Curb Height: 8" • Median Barrier: Yes: [ ] No: [X]	There is chain link fencing @ both inlet and outlet edges.
Deck Surface	• AC [X] Concrete [ ] Wood [ ]	
Span Hinges	• None [X]	
Restrainers	At: Abutments [ ] Bents [ ] None [X]	
Soffit Opening Locations	• None [X]	
Traffic Lanes on Bridge	• No. of Traffic Lanes: 1 lane driveway • Width of Median: • Width of Shoulder, Left: Right:	
Approaches	• Approach Slab at: BB [ ] EB [ ] None [X] • No. of Traffic 1 lane in WB & 1 bike lane • Width of Median: None • Width of Shoulder: Left: Right: • Width of Sidewalk: Left: Right: • Railing Type: Left: Right: • Railing Height: Left: Right:	

SUBSTRUCTURE AND UNDERSIDE COMPONENTS	DESCRIPTION	CONDITION REMARKS
Abutments Types & Wingwalls	• Abutment Types: Conc • Integral wingwalls [X] and / or Headwalls: [ ]	Top slab is supported on channel concrete lining
Bent n/a	• Materials: • Number of bents: • Pier Wall Type [ ] Column Type [ ] • X-sectional Dimensions: • Skew at Bents:	
Piling	• Not Visible [X] Pile Type: • Pile Extension:	
Abutment and/or Bent Footings	• Footings: Visible [ ] Not Visible [X] • Invert slab: Yes [X] No [ ]	
Embankment Condition and Erosion Control Measures	Rock slope & vegetation N. end; and concrete lining S. end.	
Road Under the Bridge	• None [X] • No. of Traffic Lanes: • Width of Median: • Width of Shoulder: Left: Right • Width of Sidewalk: Left: Right	

MISCELLANEOUS FEATURES	DESCRIPTION	REMARKS
Evidence of Previous Work	[ ] Seismic Retrofit [ ] Rehab & Repairs	
Visible Utilities	• Gas [ ] Water [ ] Sewer [ ] • Electrical [ ] Telecommunication [ ] • Other Utilities: • Structure Lighting: • Manhole on Deck:	
Availability of Detours	Possible	
Drainage Facilities on Structure	• None	
Drainage Facilities Under Structure	None	
Existing Facilities at Structure	• Retaining Walls: None [ ] Integral [ ] Near Abuts [ ]	Channelized creek before and after the culvert
Visual Hydraulic Assessment – Fish Passage	Flow present [X] Fish Spawning Route [ ]	



Photo 3 – View of substructure & defects in concrete at NW corner



Photo 4 – Substructure & channel lining looking NE



Photo 5 – View of driveway to the parking lot on Reed Ave



Photo 6 – View of substructure east side of the bridge



Photo 7 – View of Channelized creek looking west



Photo 8 – View of the semi-channelized creek upstream of the culvert

MILL VALLEY STRUCTURE NO. 68

STRUCTURE NO. 68 - MILLER AVE MEDIAN PEDESTRIAN BRIDGE OVER ARROYO CORTE DEL PRESIDIO TRIBUTARY



Photo 1 – View of Structure Looking North



Photo 2 - Street Level Looking South

SUMMARY & RECOMMENDATIONS

The Bridge was visually inspected by Manouchehr Mahmoudzadeh, PE, on April 29, 2020.

The field notes and photos are recorded in the subsequent pages of this section.

General Observations

The wooden pedestrian bridge is of more recent vintage and in the median on Miller Avenue. The quality of the concrete abutment walls is good and the timber structure is in overall good condition.

There is a vehicular crossing (RCB culvert) adjacent and east of the bridge.

Structure's Qualitative Health & Serviceability Condition Score (0-100): < 90

Qualitative Estimate of Structure's Safe Remaining Life: < 40 years

Recommendations

Clean the clogged storm drains adjacent to the structure.

Urgency of Maintenance Needs

The above routine work on the should be done by maintenance crews when in the area.

Approximate Cost of Rehabilitation or Repairs: None

FIELD OBSERVATION NOTES

Observation Date and Time: 4-29-20, 4:00 p.m. Caltrans District: 4 County: Marin

Facility Carried: Miller Ave Feature Intersected: Arroyo Corte Madera Tributary Bridge X Culvert ☐

Mill Valley Crossing No: 68 Caltrans Bridge No: _____ Year Built: _____

Total Width: 5' Total Length: 3'-10" No. of Spans (Bridge): 1 No. of Chambers (Culvert): _____

Site Coordinates (Apple iPhone): 37° 53' 40" N & 122° 31' 58" W Weather: Partly Cloudy

Street Posted for: Truck Weight Limit ☐ Speed Limit ☐ Nearest Postal Address: 507 Miller Ave

SUPERSTRUCTURE AND TOPSIDE COMPONENTS	DESCRIPTION	CONDITION REMARKS
Superstructure Basics	• Structure Type & Materials: Timber Pedestrian Bridge • Alignment: Curved ☐ Tangent X • Superstructure Depth: 8" • Span Lengths: 3' ± • Waterway Opening Height: 2' • Skew at Abutments: approx. 0° • Curb-to-Curb Width: 5' • Expansion Joints: n/a • Culvert ϕ or Dimensions: n/a	There is a wide adjacent vehicular RCB culvert
Railings, Sidewalks & Curbs	• Railing Type: Wood Left: X Right: X • Railing Height: 42" Left: X Right: X • Sidewalks on n/a side(s) • Width of Sidewalk: n/a Left: Right: • Curb Height: n/a • Median Barrier: Yes: ☐ No X	
Deck Surface	• AC ☐ Concrete ☐ Wood X	
Span Hinges	• None X	
Restrainers	At: Abutments ☐ Bents ☐ None X	
Soffit Opening Locations	• None X	
Traffic Lanes on Bridge n/a	• No. of Traffic Lanes: • Width of Median: • Width of Shoulder: Left: Right:	
Approaches n/a	• Approach Slab at: BB ☐ EB ☐ None X • No. of Traffic Lanes: 2 • Width of Median: None • Width of Shoulder: Left: Right: • Width of Sidewalk: Left: Right: • Railing Type: Left: Right: • Railing Height: Left: Right:	

SUBSTRUCTURE AND UNDERSIDE COMPONENTS	DESCRIPTION	CONDITION REMARKS
Abutments Types & Wingwalls	• Abutment Types: Conc • Integral wingwalls [X] and / or Headwalls: [ ]	Channel walls and ped bridge abutment are aligned together
Bent n/a	• Materials: • Number of bents: • Pier Wall Type [ ] Column Type [ ] • X-sectional Dimensions: • Skew at Bents: <	
Piling	• Not Visible [X] Pile Type: • Pile Extension:	Likely, no piles exists or needed at abutments
Abutment and/or Bent Footings	• Footings: Visible [ ] Not Visible [X] • Invert slab: Yes [X] No [ ]	Footing are likely not present
Embankment Condition and Erosion Control Measures	Channel concrete walls on both sides of the structure	
Road Under the Bridge	• None [X] • No. of Traffic Lanes: • Width of Median: • Width of Shoulder: Left: Right • Width of Sidewalk: Left: Right	

MISCELLANEOUS FEATURES	DESCRIPTION	REMARKS
Evidence of Previous Work	[ ] Seismic Retrofit [ ] Rehab & Repairs	
Visible Utilities	• Gas [ ] Water [ ] Sewer [ ] • Electrical [ ] Telecommunication [ ] • Other Utilities: • Structure Lighting: • Manhole on Deck:	
Availability of Detours	Possible	
Drainage Facilities on Structure	• The small channel spanned is likely only a storm drain facility, not a creek	
Drainage Facilities Under Structure	A storm drain outlet through each channel wall near the bridge (both clogged up)	
Existing Facilities at Structure	• Retaining Walls: None [ ] Integral [ ] Near Abuts [ ]	Channelized flow in and out of the bridges
Visual Hydraulic Assessment – Fish Passage	Flow present [ ] Fish Spawning Route [ ]	No flow present



Photo 3 – Profile view



Photo 4 – Profile view



Photo 5 – Clogged storm drain by the structure



Photo 6 – Another clogged storm drain by the structure



Photo 7 – DI in the curb leading to outlet in the creek



Photo 8 – Another DI in the curb leading to outlet in the creek

MILL VALLEY STRUCTURE NO. 69

STRUCTURE NO. 69 - MILLER AVE. MEDIAN BRIDGE OVER ARROYO CORTE DEL PRESIDIO TRIBUTARY



Photo 1 – View of Road Intersection Looking North



Photo 2 - Street Level Looking South

SUMMARY & RECOMMENDATIONS

The Bridge was visually inspected by Manouchehr Mahmoudzadeh, PE, on April 29, 2020.

The field notes and photos are recorded in the subsequent pages of this section.

General Observations

The reinforced concrete single box culvert is over 50 years old and under the median on Miller Avenue. The concrete quality is good and the visible structure is in overall good condition. The AC surfacing and curbs are also in good condition. There is a pedestrian crossing adjacent and west of the bridge.

Structure's Qualitative Health & Serviceability Condition Score (0-100): < 90

Qualitative Estimate of Structure's Safe Remaining Life: < 40 years

Recommendations

Clean the bushes and debris near the edges of the bridge to prevent falling in the creek and adversely impacting the flow.

Urgency of Maintenance Needs

The above routine work should be done by maintenance crews when in the area.

Approximate Cost of Rehabilitation or Repairs

None.

FIELD OBSERVATION NOTES

Observation Date and Time: 4-29-20, 4:00 p.m. Caltrans District: 4 County: Marin

Facility Carried: Miller Ave Feature Intersected: Arroyo Corte Madera Tributary Bridge [X] Culvert [ ]

Mill Valley Crossing No: 69 Caltrans Bridge No: _____ Year Built: _____

Total Width: _____ Total Length: 66' No. of Spans (Bridge): __ No. of Chambers (Culvert): 1

Site Coordinates (Apple iPhone): 37° 53' 40" N & 122° 31' 58" W Weather: Partly Cloudy

Street Posted for: Truck Weight Limit [ ] Speed Limit [ ] Nearest Postal Address: 507 Miller Ave

SUPERSTRUCTURE AND TOPSIDE COMPONENTS	DESCRIPTION	CONDITION REMARKS
Superstructure Basics	• Structure Type & Materials: Vehicular RCB Culvert • Alignment: Curved [ ] Tangent [X] • Superstructure Depth: 4" • Span Lengths: • Waterway Opening Height: • Skew at Abutments: approx. 0° • Curb-to-Curb Width: 54' • Expansion Joints: n/a • Culvert ϕ or Dimensions: 4' x 2'	RCB: Reinforced Concrete Box There are 2 adjacent structures at this location, a vehicular RCB culvert and a timber pedestrian bridge (covered separately)
Railings, Sidewalks & Curbs	• Railing Type: Left: [ ] Right: [ ] • Railing Height: Left: Right: • Sidewalks on ____ side(s) • Width of Sidewalk: Left: Right: • Curb Height: 6" • Median Barrier: Yes: [ ] No: [ ]	There are no railings on this bridge because of grassy median, just 8" concrete parapet at both edges
Deck Surface	• AC [X] Concrete [ ] Wood [ ]	AC is in good condition
Span Hinges	• None [X]	
Restrainers	At: Abutments [ ] Bents [ ] None [X]	
Soffit Opening Locations	• None [X]	
Traffic Lanes on Bridge	• No. of Traffic Lanes: 2 • Width of Median: 6' • Width of Shoulder: Left: Right:	Flat AC Median, striped apart from the travelways
Approaches n/a	• Approach Slab at: BB [ ] EB [ ] None [X] • No. of Traffic Lanes: 2 • Width of Median: None • Width of Shoulder: Left: Right: • Width of Sidewalk: Left: Right: • Railing Type: Left: Right: • Railing Height: Left: Right:	

SUBSTRUCTURE AND UNDERSIDE COMPONENTS	DESCRIPTION	CONDITION REMARKS
Abutments Types & Wingwalls	• Abutment Types: Conc • Integral wingwalls [X] and / or Headwalls: [ ]	Channel walls and RCB culvert walls lined up with each other
Bent n/a	• Materials: • Number of bents: • Pier Wall Type [ ] Column Type [ ] • X-sectional Dimensions: • Skew at Bents: <	
Piling	• Not Visible [X] Pile Type: • Pile Extension:	Likely, no piles exists or needed at abutments
Abutment and/or Bent Footings	• Footings: Visible [ ] Not Visible [X] • Invert slab: Yes [X] No [ ]	Footing are likely not present
Embankment Condition and Erosion Control Measures	Channel concrete walls on both sides of the structure	
Road Under the Bridge	• None [X] • No. of Traffic Lanes: • Width of Median: • Width of Shoulder: Left: Right • Width of Sidewalk: Left: Right	

MISCELLANEOUS FEATURES	DESCRIPTION	REMARKS
Evidence of Previous Work	[ ] Seismic Retrofit [ ] Rehab & Repairs	
Visible Utilities	• Gas [ ] Water [ ] Sewer [ ] • Electrical [ ] Telecommunication [ ] • Other Utilities: • Structure Lighting: • Manhole on Deck:	
Availability of Detours	Possible	
Drainage Facilities on Structure	• The small channel spanned is likely only a storm drain facility, not a creek	
Drainage Facilities Under Structure	A storm drain outlet through each channel wall near the bridge	
Existing Facilities at Structure	• Retaining Walls: None [ ] Integral [ ] Near Abuts [ ]	Channelized flow in and out of the bridges
Visual Hydraulic Assessment – Fish Passage	Flow present [ ] Fish Spawning Route [ ]	No flow present



Photo 3 – View of culvert's outlet



Photo 4 – View downstream of the outlet



Photo 5 – View of culvert's inlet



Photo 6 – View of upstream of the inlet



Photo 7 – View of adjacent pedestrian bridge and upstream of the inlet

MILL VALLEY STRUCTURE NO. 70

STRUCTURE NO. 70 - MILLER AVENUE CULVERT AT ARROYO CORTE MADERA DEL PRESIDIO



Photo 1 - Street Level Looking East



Photo 2 - Street Level Looking West

SUMMARY & RECOMMENDATIONS

The Bridge was visually inspected by Manouchehr Mahmoudzadeh, PE, on April 1, 2020.

The field notes and photos are recorded in the subsequent pages of this section.

General Observations

The structure, a reinforced concrete box culvert, is under 50 years old. A concrete wingwall connects it to the adjacent pedestrian 2-chamber culvert after a bend in the waterway. AC surfacing is in very good condition. The concrete railings on this bridge are substandard. However, they are off the travelled way and walkway.

Structure's Qualitative Health & Serviceability Condition Score (0-100): < 70

Qualitative Estimate of Structure's Safe Remaining Life: < 40 years

Recommendations

Dredge the creek bed between the two culverts by removing mud and debris to facilitate flow of water around the corner joining the adjacent creek.

Urgency of Maintenance Needs

The work recommended should be scheduled by maintenance crews in the next 3 years.

Approximate Cost of Rehabilitation or Repairs: No additional cost if done by City Maintenance

FIELD OBSERVATION NOTES

Observation Date and Time: 4-1-20, 11:50 a.m. Caltrans District: 4 County: Marin

Facility Carried: Miller Ave Feature Intersected: Arroyo Corte Madera Bridge ☐ Culvert ☒

Mill Valley Crossing No: 70 Caltrans Bridge No: _____ Year Built: _____

Total Width: 7' Total Length: 57' No. of Spans (Bridge): _ No. of Chambers (Culvert): 1

Site Coordinates (Apple iPhone): 37° 53' 33" N & 122° 31' 43" W Weather: Sunny & Clear

Street Posted for: Truck Weight Limit ☐ Speed Limit ☐ Nearest Postal Address: # 631 Miller Ave

SUPERSTRUCTURE AND TOPSIDE COMPONENTS	DESCRIPTION	CONDITION REMARKS
Superstructure Basics	• Structure Type & Materials: RCB Culvert • Alignment: Curved ☐ Tangent ☒ • Superstructure Depth: 8" • Span Lengths: • Waterway Opening Height: • Skew at Abutments: 0° • Curb-to-Curb Width: 31' • Expansion Joints: n/a • Culvert ϕ or Dimensions: 4' x 6'	RCB: Reinforced concrete box Overall, the structure is in good condition
Railings, Sidewalks & Curbs	• Railing Type: Timber Left ☒ Right ☒ • Railing Height: Left 38" Right 44" • Sidewalks on ____ side(s) • Width of Sidewalk: Left: Right: • Curb Height: 5" • Median Barrier: Yes ☐ No: ☒	Railing are off the road.
Deck Surface	• AC ☒ Concrete ☐ Wood ☐	AC is in good condition
Span Hinges	• None ☐	n/a
Restrainers	At: Abutments ☐ Bents ☐ None ☐	n/a
Soffit Opening Locations	• None ☐	n/a
Traffic Lanes on Bridge	• No. of Traffic Lanes: 2 • Width of Median: • Width of Shoulder, Left: 3' Right: 3'	
Approaches	• Approach Slab at: BB ☐ EB ☐ None ☒ • No. of Traffic Lanes: 2 • Width of Median: None • Width of Shoulder: Left: 3' Right: 3' • Width of Sidewalk: Left: Right: • Railing Type: None Left ☐ Right ☐ • Railing Height: Left: Right:	AC on approaches are in good condition.

SUBSTRUCTURE AND UNDERSIDE COMPONENTS	DESCRIPTION	CONDITION REMARKS
Abutments Types & Wingwalls	• Abutment Types: Concrete • Integral wingwalls [X] and/ or Headwalls: [X]	
Bent	• Materials: • Number of bents: • Pier Wall Type [ ] Column Type [ ] • X-sectional Dimensions: • Skew at Bents:	n/a
Piling	• Not Visible [ ] Pile Type: • Pile Extension:	n/a
Abutment and/or Bent Footings	• Footings: Visible [ ] Not Visible [ ] • Invert slab: Yes [X] No [ ]	Footings n/a
Embankment Condition and Erosion Control Measures	Natural ground covered with vegetation.	Right side @ EB connects to the adjacent structure via a common concrete wall.
Road Under the Bridge	• None [X] • No. of Traffic Lanes: • Width of Median: • Width of Shoulder: Left: Right • Width of Sidewalk: Left: Right	n/a

MISCELLANEOUS FEATURES	DESCRIPTION	REMARKS
Evidence of Previous Work	[ ] Seismic Retrofit [ ] Rehab & Repairs	
Visible Utilities	• Gas [ ] Water [ ] Sewer [ ] • Electrical [ ] Telecommunication [ ] • Other Utilities: OH power lines • Structure Lighting: • Manhole on Deck:	
Availability of Detours	Detour possible	
Drainage Facilities on Structure	• None [X] •	
Drainage Facilities Under Structure	None	
Existing Facilities at Structure	• Retaining Walls: None [ ] Integral [ ] Near Abuts [X]	Adjacent pedestrian crossing
Visual Hydraulic Assessment – Fish Passage	Flow present [X] Fish Spawning Route [ ]	



Photo 3 – View of structure and left railing



Photo 4 – View of structures at the bend in the creek's alignment



Photo 5 – View of culvert and its wingwalls

MILL VALLEY STRUCTURE NO. 71

STRUCTURE NO. 71 - MILLER AVENUE PEDESTRIAN STRUCTURE OVER ARROYO CORTE MADERA DEL PRESIDIO



Photo 1 - Street Level Looking North



Photo 2 - Street Level Looking South

SUMMARY & RECOMMENDATIONS

The Bridge was visually inspected by Manouchehr Mahmoudzadeh, PE, on April 1, 2020.

The field notes and photos are recorded in the subsequent pages of this section.

General Observations

The structure, reinforced concrete double culverts, appears approximately 20 years old. There is a concrete wall connecting to the adjacent culvert over the same creek. There are 2 gates on the north side of the culvert chambers that control flow of water through. There is a raised manhole (access hole) to pump out water and prevent the creek overflowing the nearby structures and streets at the confluence of creek branches.

The concrete surface on top is in good condition. The timber railing on this bridge meets standard height requirement and is in excellent condition.

Structure's Qualitative Health & Serviceability Condition Score (0-100): < 80

Qualitative Estimate of Structure's Safe Remaining Life: < 50 years

Recommendations

Dredge the shallow creek bed by removing mud and debris to facilitate flow of water and increase culvert capacity.

Urgency of Maintenance Needs

The work on the recommended action should be scheduled by the City's maintenance crews at the next opportunity.

Approximate Cost of Rehabilitation or Repairs : None

FIELD OBSERVATION NOTES

Observation Date and Time: 4-1-20, 12:05 p.m. Caltrans District: 4 County: Marin

Facility Carried: Miller Ave Feature Intersected: Arroyo Corte Madera Bridge ☐ Culvert ☒

Mill Valley Crossing No: 71 Caltrans Bridge No: _____ Year Built: _____

Total Width: ___ Total Length: 21' No. of Spans (Bridge): __ No. of Chambers (Culvert): 2

Site Coordinates (Apple iPhone): 37° 53' 33" N & 122° 31' 43" W Weather: Sunny & Clear

Street Posted for: Truck Weight Limit ☐ Speed Limit ☐ Nearest Postal Address Redwood Sr Res

SUPERSTRUCTURE AND TOPSIDE COMPONENTS	DESCRIPTION	CONDITION REMARKS
Superstructure Basics	• Structure Type & Materials: RCP Culvert • Alignment: Curved ☐ Tangent ☒ • Superstructure Depth: 8" • Span Lengths: 20' • Waterway Opening Height: 4'-9"± • Skew at Abutments: 0° • Curb-to-Curb Width: n/a • Expansion Joints: n/a • Culvert ϕ or Dimensions: n/a	• BB: Begin bridge • EB: End bridge • Structure is in excellent condition overall • Each culvert cell is 2'-6" ϕ with 2' solid concrete between them
Railings, Sidewalks & Curbs	• Railing Type: Timber Left ☒ Right ☒ • Railing Height: Left 42" Right 42" • Sidewalks on ____ side(s) • Width of Sidewalk: Left: Right: • Curb Height: 8" (culvert parapet) • Median Barrier: Yes ☐ No: ☒	Railings are off the road
Deck Surface	• AC ☐ Concrete ☒ Wood ☐	Concrete is in excellent condition
Span Hinges	• None ☒	
Restrainers	At: Abutments ☐ Bents ☐ None ☒	
Soffit Opening Locations	• None ☒	
Traffic Lanes on Bridge	• No. of Traffic Lanes: 2 • Width of Median: • Width of Shoulder, Left: Right:	
Approaches	• Approach Slab at: BB ☒ EB ☒ None ☐ • No. of Traffic Lanes: n/a • Width of Median: None • Width of Shoulder: Left: Right: • Width of Sidewalk: Left: Right: • Railing Type: None Left ☐ Right ☐ • Railing Height: Left: Right:	3 concrete approach path panels at BB and one at EB. Panels are 7'-6" each

SUBSTRUCTURE AND UNDERSIDE COMPONENTS	DESCRIPTION	CONDITION REMARKS
Abutments Types & Wingwalls	• Abutment Types: Conc • Integral wingwalls [X] and/ or Headwalls: [X]	
Bent n/a	• Materials: • Number of bents: • Pier Wall Type [ ] Column Type [ ] • X-sectional Dimensions: • Skew at Bents:	
Piling	• Not Visible [X] Pile Type: • Pile Extension:	
Abutment and/or Bent Footings	• Footings: Visible [ ] Not Visible [X] • Invert slab: Yes [ ] No [ ]	
Embankment Condition and Erosion Control Measures	Natural ground covered with vegetation.	Left side @ BB connects to the adjacent structure via concrete wall.
Road Under the Bridge	• None [X] • No. of Traffic Lanes: • Width of Median: • Width of Shoulder: Left: Right • Width of Sidewalk: Left: Right	

MISCELLANEOUS FEATURES	DESCRIPTION	REMARKS
Evidence of Previous Work	[ ] Seismic Retrofit [ ] Rehab & Repairs	
Visible Utilities	• Gas [ ] Water [ ] Sewer [ ] • Electrical [ ] Telecommunication [ ] • Other Utilities: • Structure Lighting: • Manhole on Deck:	
Availability of Detours	Detour possible	
Drainage Facilities on Structure	• None [X] •	
Drainage Facilities Under Structure	None	There is a raised access hole to pump out excess water.
Existing Facilities at Structure	• Retaining Walls: None [ ] Integral [ ] Near Abuts [X]	Adjacent culvert carrying vehicular traffic
Visual Hydraulic Assessment – Fish Passage	Flow present [X] Fish Spawning Route [ ]	



Photo 3 – View of Culvert inlets and substructure



Photo 4 – View of culvert gates and substructure



Photo 5 – View of wingwall



Photo 6 – View of wingwall

MILL VALLEY STRUCTURE NO. 72

STRUCTURE NO. 72 - MILLER & CAMINO ALTO INTERSECTION CULVERT CARRYING MADERA CORTE DEL PRESIDIO TRIBUTARY



Photo 1 – View of Bridge Looking West



Photo 2 - Street Level Looking East

SUMMARY & RECOMMENDATIONS

The Bridge was visually inspected by Manouchehr Mahmoudzadeh, PE, on April 24, 2020.

The field notes and photos are recorded in the subsequent pages of this section.

General Observations

The structure, a reinforced concrete double box culvert, is over 50 years old. The culvert's 2 cells run under the roadway at the intersection of Miller Avenue & Camino Alto Ave at a bend in the creek. The curbs at both ends of the culvert are spalled and the quality of top deck, headwalls and middle wall concrete is poor. There are cracks and spalls at multiple locations on various parts of substructure and some rusty rebar is exposed. There are aging timber railings at the edge of deck and along edge of east embankment along the walkway near the senior residence complex. Some parts need to be replaced to improve safety.

There are several paved open drain inlets directing surface water from Miller Ave to the creek. In addition, there are multiple deck drains and drain inlets on the street level along both edges of median, draining surface water in the creek.

AC surfacing is in good condition.

Structure's Qualitative Health & Serviceability Condition Score (0-100): < 60

Qualitative Estimate of Structure's Safe Remaining Life: < 25 years

Recommendations

1. Clean creek bed / invert slab and side drain outlets by removing mud and debris to prevent blockage that may cause further damage to the already deteriorating pier wall & abutments.
2. Repair all spalls and cracked sections by removing & patching unsound concrete (on culvert's top deck, abutments, pier wall, invert slab and drain outlets) to improve life and serviceability of the bridge.
3. Replace curb at both edges of bridge; and parts of railing to improve safety (i.e., railing along the walkway is in the vicinity of a complex for senior residents).

Urgency of Maintenance Needs

The work on repair recommendations No. 1 above should be scheduled by the maintenance crews at the next opportunity. The remaining items should be scheduled for the next five years.

Approximate Cost of Rehabilitation or Repairs: $28,000

FIELD OBSERVATION NOTES

Observation Date and Time: 4-1-20, 4:00 p.m. Caltrans District: 4 County: Marin

Facility Carried: Miller Ave Feature Intersected: Arroyo Corte Madera Tributary Bridge ☐ Culvert ☒

Mill Valley Crossing No: 72 Caltrans Bridge No: _____ Year Built: _____

Total Width: 10'-8" Total Length: 300'± No. of Spans (Bridge): __ No. of Chambers (Culvert) 2

Site Coordinates (Apple iPhone): 37° 53' 34" N & 122° 31' 47" W Weather: Sunny & Clear

Street Posted for: Truck Weight Limit ☐ Speed Limit ☐ Nearest Postal Address: Camino Alto Ave

SUPERSTRUCTURE AND TOPSIDE COMPONENTS	DESCRIPTION	CONDITION REMARKS
Superstructure Basics	• Structure Type & Materials: Double RC Box Culvert • Alignment: Curved ☐ Tangent ☒ • Top Deck Thickness: 8" • Cell widths: 4'-6" • Waterway Opening Height: 19"± • Skew at Abutments: 0° • Curb-to-Curb Width: n/a' • Expansion Joints: n/a • Culvert ϕ or Dimensions: n/a	Concrete is deteriorating at various location of the culvert's top deck, walls & invert slab.
Railings, Sidewalks & Curbs	• Railing Type: Timber Left ☐ Right ☒ • Railing Height: Left Right 42" • Sidewalks on ____ side(s) • Width of Sidewalk: Left: Right: • Curb Height: 5" • Median Barrier: Yes ☐ No: ☒	Replace deteriorating parts of railing to improve safety features of the walkway along the creek.
Deck Surface	• AC ☒ Concrete ☐ Wood ☐	AC is in good condition
Span Hinges	• None ☒	
Restrainers	At: Abutments ☐ Bents ☐ None ☒	
Soffit Opening Locations	• None ☒	
Traffic Lanes on Bridge	• No. of Traffic Lanes: Several lanes across • Width of Median: • Width of Shoulder, Left: Right:	There are several traffic lanes, sidewalks and median across the intersection on the culvert
Approaches	• Approach Slab at: BB ☐ EB ☐ None ☒ • No. of Traffic Lanes: 2 • Width of Median: None • Width of Shoulder: Left: Right: • Width of Sidewalk: Left: Right: • Railing Type: None Left: Right: Wood • Railing Height: Left: Right: 42"	

SUBSTRUCTURE AND UNDERSIDE COMPONENTS	DESCRIPTION	CONDITION REMARKS
Abutments Types & Wingwalls	• Abutment Types: n/a • Integral wingwalls [X] and/ or Headwalls: [X]	
Bent n/a	• Materials: • Number of bents: • Pier Wall Type [ ] Column Type [ ] • X-sectional Dimensions: Rec 6”x18” • Skew at Bents:	
Piling	• Not Visible [X] Pile Type: • Pile Extension:	Likely no piles exist under the structure
Abutment and/or Bent Footings	• Footings: Visible [ ] Not Visible [X] • Invert slab: Yes [X] No [ ]	
Embankment Condition and Erosion Control Measures	Concrete walls along the creek on passed SW end approaching the creek. Natural ground covered with vegetation NE end of the bridge.	There is a walkway & wood railing on the E side embankment
Road Under the Bridge	• None [X] • No. of Traffic Lanes: • Width of Median: • Width of Shoulder: Left: Right • Width of Sidewalk: Left: Right	

MISCELLANEOUS FEATURES	DESCRIPTION	REMARKS
Evidence of Previous Work	[ ] Seismic Retrofit [ ] Rehab & Repairs	
Visible Utilities	• Gas [ ] Water [ ] Sewer [ ] • Electrical [X] Telecommunication [X] • Other Utilities: OH power lines • Structure Lighting: • Manhole on Deck:	
Availability of Detours	Detour possible	
Drainage Facilities on Structure	• None [ ] • Several deck drains; and other types of drains	AC paved ditch & other drain inlets Draining Miller in the creek
Drainage Facilities Under Structure	None	Outlets of various drainage pipes
Existing Facilities at Structure	• Retaining Walls: None [ ] Integral [ ] Near Abuts [X]	Adjacent pedestrian crossing
Visual Hydraulic Assessment – Fish Passage	Flow present [ ] Fish Spawning Route [ ]	



Photo 3 – View of drainage ditch on Miller Ave



Photo 4 – View of cracked headwall



Photo 5 – View of pier wall and cracked section



Photo 6 – View of cracked curb (at right edge of culvert)



Photo 7 – View of soffit (at right edge of culvert) and deteriorated section



Photo 8 – View debris in the creek



Photo 9 – View of SW end of the culvert, spalled concrete Curb and a drain outlet



Photo 10 – View of various drain inlets



Photo 11 – View inside the culvert appears to show concrete in good condition



Photo 12 – View of downstream culvert

MILL VALLEY STRUCTURE NO. 73

STRUCTURE NO. 73 – MILLER AVENUE OVER DRAINAGE RCPS



Photo 1 – Street Level Looking Northwest



Photo 2 - Street Level Looking Southeast

SUMMARY & RECOMMENDATIONS

The Bridge was visually inspected by Nader Tamannaie, PE, on June 27, 2020.

The field notes and photos are recorded in the subsequent pages of this section.

General Observations

This is the site of two 3'-diamter RCP used to drain the land and road runoff on the high school side of Miller Avenue. The RCPs drain into a tributary to Arroyo Corte Madera. The pipes and the backflow-control vault at the inlet appear to be in reasonable condition.

Juvenile fish were seen at the outlet pool.

Structure's Qualitative Health & Serviceability Condition Score (0-100): < 90

Qualitative Estimate of Structure's Safe Remaining Life: < 40 years

Recommendations

None

Urgency of Maintenance Needs

None

Approximate Cost of Rehabilitation or Repairs

None

FIELD OBSERVATION NOTES

Observation Date and Time: 6-27-20, 3:15 p.m. Caltrans District: 4 County: Marin

Facility Carried: Miller Ave Feature Intersected: Trib. to Arroyo Corte Madera Bridge ☐ Culvert ☒

Mill Valley Crossing No: 73 Caltrans Bridge No: _____ Year Built: _____

Total Width: _____ Total Length: 115'± No. of Spans (Bridge): __ No. of Chambers (Culvert): 2

Site Coordinates (Apple iPhone): 37° 53' 30" N & 122° 31' 39" W Weather: Cloudy

Street Posted for: Truck Weight Limit ☐ Speed Limit ☐ Nearest Postal Address: MV HS

SUPERSTRUCTURE AND TOPSIDE COMPONENTS	DESCRIPTION	CONDITION REMARKS
Superstructure Basics	• Structural Type & Materials: 2 RCPs • Alignment: Curved ☐ Tangent ☒ • Superstructure Depth: • Span Lengths: • Waterway Opening Height: • Skew at Abutments: 30°± • Curb-to-Curb Width: 77'± • Expansion Joints: • Culvert ϕ or Dimensions: 3' RCPs X 2	
Railings, Sidewalks & Curbs	• Railing Type: Wood Left Right • Railing Height: Left 3'-6" Right • Sidewalks on 1 side(s) • Width of Sidewalk: Left: 6' Right: • Curb Height: 6" • Median Barrier: Yes ☐ No: ☒	All on Miller Avenue
Deck Surface	• AC ☒ Concrete ☒ Wood ☐	AC is in good condition
Span Hinges	• None ☐	n/a
Restrainers	At: Abutments ☐ Bents ☐ None ☐	n/a
Soffit Opening Locations	• None ☐	n/a
Traffic Lanes on Bridge	• No. of Traffic Lanes: 2+ 2 lanes + Lt Shldr + R/L Bike lanes • Width of Median: 13.5' • Width of Shoulder, Left: 13' Right: 6'	Right shoulder is bike lane Left shoulder is for parking and a bike lane
Approaches	• Approach Slab at: BB ☐ EB ☐ None ☒ • No. of Traffic Lanes: 4 • Width of Median: 13.5'± max & Varies • Width of Shoulder: Left: 13' Right: 6' • Width of Sidewalk: Left: Right: 6' • Railing Type: None Left: Right • Railing Height: Left: Right	Right shoulder is bike lane Left shoulder is for parking and a bike lane

SUBSTRUCTURE AND UNDERSIDE COMPONENTS	DESCRIPTION	CONDITION REMARKS
Abutments Types & Wingwalls	• Abutment Types: • Integral wingwalls ☐ and/ or Headwalls ☐	Backflow control vault at inlets
Bent	• Materials: • Number of bents: • Pier Wall Type ☐ Column Type ☐ • X-sectional Dimensions: • Skew at Bents:	n/a
Piling	• Not Visible ☐ Pile Type: • Pile Extension:	n/a
Abutment and/or Bent Footings	• Footings: Visible ☐ Not Visible ☐ • Invert slab: Yes ☐ No ☐	n/a
Embankment Condition and Erosion Control Measures	Stable	
Road Under the Bridge	• None ☐ • No. of Traffic Lanes: • Width of Median: • Width of Shoulder: Left: Right • Width of Sidewalk: Left: Right	n/a

MISCELLANEOUS FEATURES	DESCRIPTION	REMARKS
Evidence of Previous Work		System looks relatively recent
Visible Utilities	• Gas ☐ Water ☐ Sewer ☒ • Electrical ☒ Telecommunication ☒ • Other Utilities: • Structure Lighting: • Manhole on Deck:	Above grade sewer manhole near outlets Vault on the same side
Availability of Detours	Available	
Drainage Facilities on Structure	• None ☐ •	n/a
Drainage Facilities Under Structure		n/a
Existing Facilities at Structure	• Retaining Walls: None ☒ Integral ☐ Near Abuts ☐	
Visual Hydraulic Assessment – Fish Passage	Flow present ☒ Fish Spawning Route ☒	Juvenile fish observed in the outlet pool



Photo 3 – Culverts' outlets in Corte Madera Creek tributary. Sanitary sewer manhole in the back.



Photo 4 – Potential inlets vault location across Miller Avenue made to control any backflow



Photo 5 – Manhole cover at the inlets vault



Photo 6 – Downstream of the outlets



Photo 7 – Adjacent sidewalk, street parking and bike lane



Photo 8 – Juvenile fish at the outlet

MILL VALLEY STRUCTURE NO. 80

STRUCTURE NO. 80 – WARNER CANYON CREEK CULVERT AT GLEN DRIVE



Photo 1 – Street level Looking North



Photo 2 – Street level Looking South

SUMMARY & RECOMMENDATIONS

The Bridge was visually inspected by Manouchehr Mahmoudzadeh, PE, on April 28, 2020.

The field notes and photos are recorded in the subsequent pages of this section.

General Observations

The site contains two culverts draining the gulley through which the headwaters of Warner Canyon intersect Glen Drive. The higher culvert is newer 2'-diameter with 1"-thick rubberized lining inside an older and larger-diameter corrugated metal pipe. Following downhill of this culvert and crossing Glen Drive is a 30"-diameter RCP with a 7'-wide, 4'-high headwall and wingwalls system at it inlet, accompanied by a steel pipe debris cage here. This culvert appears to have also been lined with a 2'-diameter rubber-type pipe, daylighting at its outlet. The original culverts are likely over 50 years old, but the linings and headwall/pipe cage system are newer.

At the street level, the AC surfacing is in good condition.

Structure's Qualitative Health & Serviceability Condition Score (0-100): < 90

Qualitative Estimate of Structure's Safe Remaining Life: < 50 years

Recommendations

Clean debris in the small creek between upper lower culverts to facilitate flow.

Urgency of Maintenance Needs

The work should be scheduled as a routine maintenance task.

Approximate Cost of Rehabilitation or Repairs: None

FIELD OBSERVATION NOTES

Observation Date and Time: 4-29-20, 11:50 a.m. Caltrans District: 4 County: Marin

Facility Carried: Glen Drive Feature Intersected: Warner Canyon Creek Bridge ☐ Culvert ☒

Mill Valley Crossing No: 80 Caltrans Bridge No: _____ Year Built: _____

Total Width: ____ Total Length: 50' No. of Spans (Bridge): ____ No. of Chambers (Culvert): 1

Site Coordinates (Apple iPhone): 37° 53' 14" N & 122° 31' 29" W Weather: Partly Cloudy

Street Posted for: Truck Weight Limit ☐ Speed Limit ☐ Nearest Postal Address #34 Glen Drive

SUPERSTRUCTURE AND TOPSIDE COMPONENTS	DESCRIPTION	CONDITION REMARKS
Superstructure Basics	• Structure Type & Materials: RCP and CMP Culverts, Rubber-Lined • Alignment: Curved ☐ Tangent ☒ • Superstructure Depth: n/a • Span Lengths: n/a • Waterway Opening Height: n/a • Skew at Abutments: 0° • Curb-to-Curb Width: n/a • Expansion Joints: n/a • Culvert ϕ or Dimensions: 30" - 24"	
Railings, Sidewalks & Curbs	• Railing Type: None Left: Right: • Railing Height: Left: Right: • Sidewalks on ____ side(s) • Width of Sidewalk: Left: Right: • Curb Height: 8" (culvert parapet) • Median Barrier: Yes ☐ No: ☒	
Deck Surface	• AC ☒ Concrete ☐ Wood ☐	AC is good condition
Span Hinges	• None ☐	n/a
Restrainers	At: Abutments ☐ Bents ☐ None ☐	n/a
Soffit Opening Locations	• None ☐	n/a
Traffic Lanes on Bridge	• No. of Traffic Lanes: 2 • Width of Median: • Width of Shoulder, Left: Right:	
Approaches	• Approach Slab at: BB ☐ EB ☐ None ☒ • No. of Traffic Lanes: 2 • Width of Median: None • Width of Shoulder: Left: Right: • Width of Sidewalk: Left: Right: • Railing Type: None Left Right • Railing Height: Left: Right:	

SUBSTRUCTURE AND UNDERSIDE COMPONENTS	DESCRIPTION	CONDITION REMARKS
Abutments Types & Wingwalls	• Abutment Types: Conc • Integral wingwalls ☐ and/ or Headwalls: ☒	
Bent	• Materials: • Number of bents: • Pier Wall Type ☐ Column Type ☐ • X-sectional Dimensions: • Skew at Bents:	n/a
Piling	• Not Visible ☐ Pile Type: • Pile Extension:	n/a
Abutment and/or Bent Footings	• Footings: Visible ☐ Not Visible ☐ • Invert slab: Yes ☐ No ☐	n/a
Embankment Condition and Erosion Control Measures	Natural ground covered with vegetation S. End. Concrete Canal Lining @ the North end.	
Road Under the Bridge	• None ☐ • No. of Traffic Lanes: • Width of Median: • Width of Shoulder: Left: Right • Width of Sidewalk: Left: Right	n/a

MISCELLANEOUS FEATURES	DESCRIPTION	REMARKS
Evidence of Previous Work	☐ Seismic Retrofit ☐ Rehab & Repairs	
Visible Utilities	• Gas ☐ Water ☐ Sewer ☐ • Electrical ☒ Telecommunication ☒ • Other Utilities: • Structure Lighting: • Manhole on Deck:	
Availability of Detours	Detour possible	
Drainage Facilities on Structure	• None ☐ •	1 Drain inlet N. of the headwall
Drainage Facilities Under Structure	None	
Existing Facilities at Structure	• Retaining Walls: None ☐ Integral ☐ Near Abuts ☐	
Visual Hydraulic Assessment – Fish Passage	Flow present ☒ Fish Spawning Route ☐	Water is Barely present in the creek



Photo 3 – View of debris rack and headwall system at the inlet of lower culvert



Photo 4 – View of outlet of upper lined culvert



Photo 5 – View of outlet of the lower culvert



Photo 6 – View of downstream of lower culvert outlet and beyond

MILL VALLEY STRUCTURE NO. 81

STRUCTURE NO. 81 – WARNER CANYON CREEK CULVERT AT TARTAN ROAD



Photo 1 – Street level Looking North



Photo 2 – Street level Looking South

SUMMARY & RECOMMENDATIONS

The site was visually inspected by Manouchehr Mahmoudzadeh, PE, on April 29, 2020.

The field notes and photos are recorded in the subsequent pages of this section.

General Observations

This is the site of a double concrete culvert system that appears to be 70 to 80 years old, or older, and in fair condition. The culverts share a headwall and wingwall system at the inlet, accompanied by a debris rack. The headwall has several cracks and spalled sections; and debris metal rack is slightly bent and rusted. There are debris in the creek ahead of culvert headwall. AC surfacing is in good condition.

Structure's Qualitative Health & Serviceability Condition Score (0-100): < 60

Qualitative Estimate of Structure's Safe Remaining Life: < 40 years

Recommendations

1. Clean debris in the creek upstream of culverts headwall to facilitate flow of water in the creek
2. Repair cracks and spalls and abraded concrete on the surface of headwall to improve overall service life of culvert.
3. **I**nstall a railing on the top of headwall on the south. side of the road to enhance pedestrian safety.

Urgency of Maintenance Needs

The work on the recommended tasks should be scheduled in the next 5-10 years.

Approximate Cost of Rehabilitation or Repairs : $21,000

FIELD OBSERVATION NOTES

Observation Date and Time: 4-29-20, 12:40 p.m. Caltrans District: 4 County: Marin

Facility Carried: Glen Drive Feature Intersected: Warner Canyon Creek Bridge ☐ Culvert ☒

Mill Valley Crossing No: 81 Caltrans Bridge No: _____ Year Built: _____

Total Width: __ Total Length: 35' No. of Spans (Bridge): __ No. of Chambers (Culvert): 2

Site Coordinates (Apple iPhone): 37° 54' 33" N & 122° 32' 20" W Weather: Partly Cloudy

Street Posted for: Truck Weight Limit ☐ Speed Limit ☐ Nearest Postal Address #10 Glen Dr.

SUPERSTRUCTURE AND TOPSIDE COMPONENTS	DESCRIPTION	CONDITION REMARKS
Superstructure Basics	• Structure Type & Materials: Concrete Culverts (2) • Alignment: Curved ☐ Tangent ☒ • Superstructure Depth: n/a • Span Lengths: • Waterway Opening Height: • Skew at Abutments: 30° • Curb-to-Curb Width: 27'-6" • Expansion Joints: n/a • Culvert ϕ or Dimensions: 4'	Side-by-side oval and a round culverts
Railings, Sidewalks & Curbs	• Railing Type: Left: Right: • Railing Height: Left: Right: • Sidewalks on ____ side(s) • Width of Sidewalk: Left: Right: • Curb Height: 8" (headwall parapet) • Median Barrier: Yes ☐ No: ☒	A railing is required S. side of the road.
Deck Surface	• AC ☒ Concrete ☐ Wood ☐	AC is good condition
Span Hinges	• None ☐	n/a
Restrainers	At: Abutments ☐ Bents ☐ None ☐	
Soffit Opening Locations	• None ☐	n/a
Traffic Lanes on Bridge	No. of Traffic Lanes: 1 lane in each direction • Width of Median: • Width of Shoulder, Left: Right:	n/a
Approaches	• Approach Slab at: BB ☐ EB ☐ None ☒ • No. of Traffic Lanes: n/a • Width of Median: None • Width of Shoulder: Left: Right: • Width of Sidewalk: Left: Right: • Railing Type: None Left Right • Railing Height: Left: Right:	

SUBSTRUCTURE AND UNDERSIDE COMPONENTS	DESCRIPTION	CONDITION REMARKS
Abutments Types & Wingwalls	• Abutment Types: Concrete • Integral wingwalls [X] and/ or Headwalls: [X]	
Bent n/a	• Materials: • Number of bents: • Pier Wall Type [ ] Column Type [ ] • X-sectional Dimensions: 12”x48” Rec • Skew at Bents: 45°	There is rounded concrete nose at the headwall separating the two culverts
Piling n/a	• Not Visible [ ] Pile Type: • Pile Extension:	n/a
Abutment and/or Bent Footings n/a	• Footings: Visible [ ] Not Visible [ ] • Invert slab: Yes [ ] No [ ]	n/a
Embankment Condition and Erosion Control Measures	Natural ground covered with vegetation both sides of the creek.	
Road Under the Bridge n/a	• None [ ] • No. of Traffic Lanes: • Width of Median: • Width of Shoulder: Left: Right • Width of Sidewalk: Left: Right	n/a

MISCELLANEOUS FEATURES	DESCRIPTION	REMARKS
Evidence of Previous Work	[ ] Seismic Retrofit [ ] Rehab & Repairs	
Visible Utilities	• Gas [ ] Water [ ] Sewer [ ] • Electrical [ ] Telecommunication [ ] • Other Utilities: • Structure Lighting: • Manhole on Deck:	
Availability of Detours	Detour or stage possible	
Drainage Facilities on Structure	• None [ ] •	12” corrugated Storm drain in EB direction
Drainage Facilities Under Structure	None	
Existing Facilities at Structure	• Retaining Walls: None [ ] Integral [X] Near Abuts [ ]	7’x14’x12” retaining walls
Visual Hydraulic Assessment – Fish Passage	Flow present [ ] Fish Spawning Route [ ]	Dry



Photo 3 – View of debris rack and headwall at double culverts inlet, looking west



Photo 4 – View of creek looking east



Photo 5 – View of the headwall at the inlet with the outlet of a storm drain built in



Photo 6 – Close view of concrete around the storm drain outlet



Photo 7 – View of concrete defects



Photo 8 – View of debris rack and SW retaining wall

MILL VALLEY STRUCTURE NO. 82

STRUCTURE NO. 82 – WARNER CANYON CREEK CULVERT AT VISTA LINDA AVENUE



Photo 1 - Street Level Looking East



Photo 2 - Street Level Looking West

SUMMARY & RECOMMENDATIONS

The Bridge was visually inspected by Manouchehr Mahmoudzadeh, PE, on May 29, 2020.

The field notes and photos are recorded in the subsequent pages of this section.

General Observations

The structure, a combination of two round reinforced concrete culverts, is most likely over 60 years old. These culverts convey considerable flow, so it's appropriate that at the outlet the ground is fortified with rock. Presence of cracks, spalls and delamination is indicative of deteriorating concrete. There is a timber retaining wall above the headwall supporting the roadway, which contains deteriorated wood. Debris & bushes have partially blocked left (north) culvert. The timber railing on left side is substandard and fails to meet safety railing minimum height requirement.

There is a street warring sign on timber post that has been struck and knocked off its foundation.

Structure's Qualitative Health & Serviceability Condition Score (0-100): < 60

Qualitative Estimate of Structure's Safe Remaining Life: < 30 years

Recommendations

1. Clean debris, bushes & branches to remove partial blockage of left culvert chamber.
2. Repair headwall cracks and spalls to improve service life of the bridge.
3. Replace deteriorated pieces of wood to improve service life of the retaining wall.
4. The rail may be modified to meet minimum height.
5. Replace street sign.

Urgency of Maintenance Needs

The work on the major repairs to the culverts (items 1-4 above) should be scheduled for the next 5 years. Item no. 4 above should done by the City's maintenance crews at the first opportunity.

Approximate Cost of Rehabilitation or Repairs: $28,000

FIELD OBSERVATION NOTES

Observation Date and Time: 4-29-20, 10:45 a.m. Caltrans District: 4 County: Marin

Facility Carried: Vista Linda Feature Intersected: Warner Canyon Creek Bridge ☐ Culvert ☒

Mill Valley Crossing No: 82 Caltrans Bridge No: _____ Year Built: _____

Total Width: ____ Total Length: 45' No. of Spans (Bridge): ___ No. of Chambers (Culvert) 2

Site Coordinates (Apple iPhone): 37° 54' 54" N & 122° 32' 14" W Weather: Partly Cloudy

Street Posted for: Truck Weight Limit ☐ Speed Limit ☐ Nearest Postal Address Vista Ave & Park

SUPERSTRUCTURE AND TOPSIDE COMPONENTS	DESCRIPTION	CONDITION REMARKS
Superstructure Basics	• Structure Type & Materials: RC double round culverts • Alignment: Curved ☐ Tangent ☒ • Superstructure Depth: • Span Lengths: • Waterway Opening Height (Bridge): n/a • Skew at Abutments: 45° • Curb-to-Curb Width: 31'-3" • Expansion Joints: n/a • Culvert ϕ or Dimensions: 4'	• 4' diameter culverts with 2' of spacing between the chambers. • Headwall is cracked, spalled and delaminating
Railings, Sidewalks & Curbs	• Railing Type: Timber Left ☒ Right ☒ • Railing Height: Left 48" Right 30" • Sidewalks on ____ side(s) • Width of Sidewalk: Left: Right: • Curb Height: 3"to 10" varies • Median Barrier: Yes ☐ No: ☒	Wood and wire mesh railing on the left side, wood railing right side
Deck Surface	• AC ☒ Concrete ☐ Wood ☐	AC surfacing is in good condition
Span Hinges	• None ☐	n/a
Restrainers	At: Abutments ☐ Bents ☐ None ☐	n/a
Soffit Opening Locations	• None ☐	n/a
Traffic Lanes on Bridge	• No. of Traffic Lanes: 2 • Width of Median: • Width of Shoulder, Left: 4' Right: 2'-6"	
Approaches	• Approach Slab at: BB ☐ EB ☐ None ☒ • No. of Traffic Lanes: 2 • Width of Median: None • Width of Shoulder: Left: 3' Right: 3' • Width of Sidewalk: Left: Right: • Railing Type: None Left ☐ Right ☐ • Railing Height: Left: Right:	

SUBSTRUCTURE AND UNDERSIDE COMPONENTS	DESCRIPTION	CONDITION REMARKS
Abutments Types & Wingwalls	• Abutment Types: n/a • Integral wingwalls ☐ and/ or Headwalls: ☒	4'x4'x8" headwall
Bent	• Materials: • Number of bents: • Pier Wall Type ☐ Column Type ☐ • X-sectional Dimensions: Rec 18"x48" • Skew at Bents:	n/a
Piling	• Not Visible ☐ Pile Type: • Pile Extension:	n/a
Abutment and/or Bent Footings	• Footings: Visible ☐ Not Visible ☐ • Invert slab: Yes ☐ No ☐	n/a
Embankment Condition and Erosion Control Measures	Natural ground covered with vegetation.	Left side @ BB connects to the adjacent structure via concrete wall.
Road Under the Bridge	• None ☐ • No. of Traffic Lanes: • Width of Median: • Width of Shoulder: Left: Right • Width of Sidewalk: Left: Right	n/a

MISCELLANEOUS FEATURES	DESCRIPTION	REMARKS
Evidence of Previous Work	☐ Seismic Retrofit ☐ Rehab & Repairs	
Visible Utilities	• Gas ☐ Water ☐ Sewer ☒ • Electrical ☒ Telecommunication ☒ • Other Utilities: • Structure Lighting: • Manhole on Deck:	
Availability of Detours	Detour possible	
Drainage Facilities on Structure	• None ☐ Deck drain NE corner	12" round concrete pipe Storm drain daylighting thru the headwall
Drainage Facilities Under Structure	None	
Existing Facilities at Structure	• Retaining Walls: None ☐ Integral ☐ Near Abuts ☐	
Visual Hydraulic Assessment – Fish Passage	Flow present ☒ Fish Spawning Route ☐	



Photo 3 – View of culverts and timber retaining wall on top of the inlet headwall



Photo 4 – View of Culvert at its outlet



Photo 5 – View of Culvert & Concrete delamination at inlet headwall



Photo 6 – View of Culvert and concrete headwall delamination at outlet



Photo 7 – Close up view of culvert blockage looking north



Photo 8 – View of partially blocked culvert outlet looking north

MILL VALLEY STRUCTURE NO. 83

STRUCTURE NO. 83 - PARK PEDESTRIAN BRIDGE OVER WARNER CANYON CREEK



Photo 1 – View of Structure Looking East



Photo 2 – View of Structure Looking West

SUMMARY & RECOMMENDATIONS

The Bridge was visually inspected by Manouchehr Mahmoudzadeh, PE, on March 31, 2020.

The field notes and photos are recorded in the subsequent pages of this section.

General Observations

The structure, an above-deck steel truss pedestrian bridge, appears to be over 40 years old and has 10,000-pound weight limit sign posted on its railing. The bridge foundations are unknown. The steel is the rusting type (Corten), does not require painting and in good condition. The deck is made of 3”x8” wood planks, severely cracked and deteriorating.

Structure’s Qualitative Health & Serviceability Condition Score (0-100): < 75

Qualitative Estimate of Structure’s Safe Remaining Life: < 50 years

Recommendations

1. Replace cracked and deteriorating wood deck planks.

Urgency of Maintenance Needs

The work on replacing the deteriorated bridge deck plans should be top priority.

Approximate Cost of Rehabilitation or Repairs : $7,000

FIELD OBSERVATION NOTES

Observation Date and Time: 4-29-20, 11:05 a.m. Caltrans District: 4 County: Marin

Facility Carried: Vista Linda Park Feature Intersected: Warner Canyon Creek Bridge [X] Culvert [ ]

Mill Valley Crossing No: 83 Caltrans Bridge No: _____ Year Built: _____

Total Width: 8'-8" Total Length: 71' No. of Spans (Bridge): 1 No. of Chambers (Culvert):____

Site Coordinates (Apple iPhone): 37° 54' 54" N & 122° 32' 14" W Weather: Partly Cloudy

Street Posted for: Weight Limit [X] Speed Limit [ ] Nearest Postal Address: Vista Linda Park

SUPERSTRUCTURE AND TOPSIDE COMPONENTS	DESCRIPTION	CONDITION REMARKS
Superstructure Basics	• Structure Type & Materials: Steel Above-Deck Truss Pedestrian Bridge • Alignment: Curved [ ] Tangent [X] • Superstructure Depth: 12" • Span Lengths: 70' • Waterway Opening Height: 12'-6"± • Skew at Abutments: approx. 0° • Curb-to-Curb Width: n/a • Expansion Joints: n/a • Culvert ϕ or Dimensions: n/a	
Railings, Sidewalks & Curbs	• Railing Type: SS Left: [x] Right: [x] • Railing Height: Left: 44" Right: 44" • Sidewalks on __side(s) • Width of Sidewalk: Left: Right: • Curb Height: n/a • Median Barrier: Yes: [ ] No: [X]	
Deck Surface	• AC [ ] Concrete [ ] Wood [X]	
Span Hinges	• None [X]	
Restrainers	At: Abutments [ ] Bents [ ] None [X]	3"x8" planks severely cracked
Soffit Opening Locations	• None [X]	
Traffic Lanes on Bridge	• No. of Traffic Lanes: Pedestrians only • Width of Median: • Width of Shoulder Left: Right:	
Approaches	• Approach Slab at: BB [x] EB [x] None [ ] • No. of Traffic Lanes: • Width of Median: None • Width of Shoulder: Left: Right: • Width of Sidewalk: Left: Right: • Railing Type: Left: [ ] Right: [ ] • Railing Height: Left: Right:	5'-8" x 11' concrete panel on each approach

SUBSTRUCTURE AND UNDERSIDE COMPONENTS	DESCRIPTION	CONDITION REMARKS
Abutments Types & Wingwalls	• Abutment Types: Concrete seats • Integral wingwalls ☐ and / or Headwalls: ☐	Steel Plate bearing on Concrete footing on each side
Bent n/a	• Materials: • Number of bents: • Pier Wall Type ☐ Column Type ☐ • X-sectional Dimensions: • Skew at Bents:	
Piling	• Not Visible ☒ Pile Type: • Pile Extension:	
Abutment and/or Bent Footings	• Footings: Visible ☐ Not Visible ☒ • Invert slab: Yes ☐ No ☐	Concrete footing partially exposed
Embankment Condition and Erosion Control Measures	Rock slope & vegetation all 4 sides	
Road Under the Bridge	• None ☒ • No. of Traffic Lanes: • Width of Median: • Width of Shoulder: Left: Right • Width of Sidewalk: Left: Right	

MISCELLANEOUS FEATURES	DESCRIPTION	REMARKS
Evidence of Previous Work	☐ Seismic Retrofit ☐ Rehab & Repairs	
Visible Utilities	• Gas ☐ Water ☐ Sewer ☐ • Electrical ☒ Telecommunication ☒ • Other Utilities: • Structure Lighting: • Manhole on Deck:	There are three small diameter dry utility lines attached under the bridge
Availability of Detours	Possible	
Drainage Facilities on Structure	• Double culvert under Vista Linda Ave	
Drainage Facilities Under Structure	None	
Existing Facilities at Structure	• Retaining Walls: None ☐ Integral ☐ Near Abuts ☐	
Visual Hydraulic Assessment – Fish Passage	Flow present ☒ Fish Spawning Route ☐	Water is barely present in the creek



Photo 3 - Bridge looking west



Photo 4 – Bridge looking east



Photo 5 – View of bridge soffit



Photo 6 – View of three small diameter utility lines



Photo 7 – View of deteriorating deck planks



Photo 8– View of deteriorating deck planks



Posted weight limit plaque on the bridge

MILL VALLEY STRUCTURE NO. 84

STRUCTURE NO. 84 – WARNER CANYON CREEK CULVERT AT MANOR DRIVE



Photo 1 – Street level of Bridge Looking East



Photo 2 - Street Level Looking West

SUMMARY & RECOMMENDATIONS

The structure was visually inspected by Manouchehr Mahmoudzadeh, PE, on April 29, 2020.

The field notes and photos are recorded in the subsequent pages of this section.

General Observations

The structure, a round 4'-diameter reinforced concrete culvert with headwalls and wingwalls, is over 50 years old. The flow runs under Manor through an open channel in and then under the parking lot of an adjacent tennis club. Despite minor cracks and spalls, the concrete quality is good. AC surfacing and gravel covered sidewalk are also in good condition. There is storm drain inlet & deck drain at SE corner of the system. The culvert under the tennis club's parking lot is presumed private and not included in this review.

There is a metal tube railing with large openings and under 42" height that is substandard per rail safety requirements.

There are lots of bushes and branches around the culvert in the tennis club parking lot that hinder inspection of bridge / culvert departure end.

Structure's Qualitative Health & Serviceability Condition Score (0-100): < 60

Qualitative Estimate of Structure's Safe Remaining Life: < 30 years

Recommendations

1. Clean bushes and vegetation around the culvert outlet to facilitate flow of water in the creek and nspection
2. Repair / replace railing to comply with railing safety and minimum height requirement.
3. Install a metal trash rack at the culver headwall (Manor Drive) to collect debris.

Urgency of Maintenance Needs

The recommended item No. 1 above should be done at the first opportunity by the maintenance crews.

The remainder should be scheduled for the next 5 years.

Approximate Cost of Rehabilitation or Repairs : $20,000

FIELD OBSERVATION NOTES

Observation Date and Time: 4-29-20, 10:00 a.m. Caltrans District: 4 County: Marin

Facility Carried: Manor Drive Feature Intersected: Warner Canyon Creek Bridge [X] Culvert [ ]

Mill Valley Crossing No: 84 Caltrans Bridge No_____ Year Built _____

Total Width: ___ Total Length: 37'± No. of Spans (Bridge): _ No. of Chambers (Culvert): 1

Site Coordinates (Apple iPhone): 37° 54' 27" N & 122° 32' 17" W Weather: Partly Cloudy

Street Posted for: Truck Weight Limit [ ] Speed Limit [ ] Nearest Postal Address: Tennis Club

SUPERSTRUCTURE AND TOPSIDE COMPONENTS	DESCRIPTION	CONDITION REMARKS
Superstructure Basics	• Structure Type & Materials: Round RC Culvert • Alignment: Curved [ ] Tangent [X] • Superstructure Depth: • Span Lengths: • Waterway Opening Height: • Skew at Abutments: 30° • Curb-to-Curb Width: 27'-6" • Expansion Joints: n/a • Culvert ϕ or Dimensions: 4'	Minor cracks & spalls can be observed around the headwall.
Railings, Sidewalks & Curbs	• Railing Type: Left: Right: Metal • Railing Height: Left: Right: 42" • Sidewalks on 1 side(s) • Width of Sidewalk: Left: 8' Right: • Curb Height: 6" • Median Barrier: Yes [ ] No: [X]	Gravel cover (unpaved) sidewalk
Deck Surface	• AC [X] Concrete [ ] Wood [ ]	AC is in good condition
Span Hinges	• None [X]	
Restrainers	At: Abutments [ ] Bents [ ] None [X]	
Soffit Opening Locations	• None [X]	
Traffic Lanes on Bridge	• No. of Traffic Lanes: 2 • Width of Median: • Width of Shoulder, Left: 4' Right: 4'	
Approaches	• Approach Slab at: BB [ ] EB [ ] None [X] • No. of Traffic Lanes: 2 • Width of Median: None • Width of Shoulder: Left: 4' Right: 4' • Width of Sidewalk: Left: 8' Right: • Railing Type: None Left: Right: • Railing Height: Left: Right:	Gravel cover (unpaved) sidewalk

SUBSTRUCTURE AND UNDERSIDE COMPONENTS	DESCRIPTION	CONDITION REMARKS
Abutments Types & Wingwalls	• Abutment Types: Concrete • Integral wingwalls [X] and/ or Headwalls [X]	Concrete headwall (7'x14')
Bent	• Materials: • Number of bents: • Pier Wall Type [ ] Column Type [ ] • X-sectional Dimensions: • Skew at Bents:	n/a
Piling	• Not Visible [ ] Pile Type: • Pile Extension:	n/a
Abutment and/or Bent Footings	• Footings: Visible [ ] Not Visible [X] • Invert slab: Yes [ ] No [ ]	
Embankment Condition and Erosion Control Measures	Original earth material with bushes & trees at North end; and sandbag side walls at South end in the open channel	Open channel past the Tennis Club parking lot
Road Under the Bridge	• None [X] • No. of Traffic Lanes: • Width of Median: • Width of Shoulder: Left: Right • Width of Sidewalk: Left: Right	

MISCELLANEOUS FEATURES	DESCRIPTION	REMARKS
Evidence of Previous Work	[ ] Seismic Retrofit [ ] Rehab & Repairs	
Visible Utilities	• Gas [ ] Water [ ] Sewer [X] • Electrical [ ] Telecommunication [ ] • Other Utilities: • Structure Lighting: • Manhole on Deck:	There are several round concrete storm drains varying in size draining in the creek at various points along the park
Availability of Detours	Detour possible	
Drainage Facilities on Structure	• None [ ]	One drain pipe on NW corner of the structure on Manor Drive
Drainage Facilities Under Structure	None	
Existing Facilities at Structure	• Retaining Walls: None [ ] Integral [ ] Near Abuts [ ]	Multiple storm drain pipes, daylight along the 300'± length of creek around tennis club & nearby park
Visual Hydraulic Assessment – Fish Passage	Flow present [X] Fish Spawning Route [ ]	



Photo 3 – View of culvert headwall looking south



Photo 4 – View of headwall and wingwall



Photo 5 – View of failing timber retaining wall at the end of wingwall



Photo 6 – View of trees and bushes around Culvert exit in the parking lot



Photo 7 – View of surface drain inlet in the parking lot



Photo 8 – View of open Channel past the parking lot



Photo 9 – View of open channel around the park



Photo 10 – View of storm drain around the park



Photo 11 – View of Rocks & Debris in the park



Photo 12 – Storm DI at surface

MILL VALLEY STRUCTURE NO. 85

STRUCTURE NO. 85 – CARMELITA AVENUE OVER WARNER CANYON CREEK CULVERT



Photo 1 – Street Level Looking South



Photo 2 - Street Level Looking North

SUMMARY & RECOMMENDATIONS

The Bridge was visually inspected by Nader Tamannaie, PE, on June 27, 2020.

The field notes and photos are recorded in the subsequent pages of this section.

General Observations

This is the site of a 3'-diameter CMP at its inlet, which ends up as an RCP somewhere along its path to the outlet. The inlet, with its small headwall, wingwalls and debris rack, are in a private property and about half of the culvert itself also runs through another private property before it goes under Carmelita Avenue and discharges into a shallow, wooded ravine on the other side of the road. The outlet area is scoured and should be protected. Otherwise, the system and the public ROW portion of the alignment are in good condition.

Structure's Qualitative Health & Serviceability Condition Score (0-100): < 85

Qualitative Estimate of Structure's Safe Remaining Life: < 40 years

Recommendations

Use rock riprap at the outlet to protect the area below the flow line from erosion and scour

Urgency of Maintenance Needs

Implement in the next 5 years.

Approximate Cost of Rehabilitation or Repairs : $5,000

FIELD OBSERVATION NOTES

Observation Date and Time: 6-27-20, 7:30 p.m. Caltrans District: 4 County: Marin

Facility Carried: Carmelita Avenue Feature Intersected: Warner Canyon Creek Bridge ☐ Culvert ☒

Mill Valley Crossing No: 85 Caltrans Bridge No: _____ Year Built: _____

Total Width: 3' Total Length: 150'± No. of Spans (Bridge): __ No. of Chambers (Culvert): 1

Site Coordinates (Apple iPhone): 37° 54' 23" N & 122° 32' 28" W Weather: Cloudy

Street Posted for: Truck Weight Limit ☐ Speed Limit ☐ Nearest Postal Address: At Buena Vista

SUPERSTRUCTURE AND TOPSIDE COMPONENTS	DESCRIPTION	CONDITION REMARKS
Superstructure Basics	• Structural Type & Materials: CMP & RCP • Alignment: Curved ☐ Tangent ☒ • Superstructure Depth: • Span Lengths: • Waterway Opening Height: • Skew at Abutments:30° • Curb-to-Curb Width: 24'± • Expansion Joints: • Culvert ϕ or Dimensions: 3'	CPM: Corrugated Metal Pipe RCP: Reinforced Concrete Pipe Culvert is CMP at inlet but end up as RCP somewhere to the outlet
Railings, Sidewalks & Curbs	• Railing Type: Left: Wood Right: Markers • Railing Height: Left 3' Right • Sidewalks on Right side(s) • Width of Sidewalk: Left: 5' Right: 3.5' • Curb Height: 6" • Median Barrier: Yes ☐ No: ☒	
Deck Surface	• AC ☒ Concrete ☐ Wood ☐	AC in good condition
Span Hinges	• None ☐	n/a
Restrainers	At: Abutments ☐ Bents ☐ None ☐	n/a
Soffit Opening Locations	• None ☐	n/a
Traffic Lanes on Bridge	• No. of Traffic Lanes: 2 • Width of Median: None • Width of Shoulder, Left: Right:	
Approaches	• Approach Slab at: BB ☐ EB ☐ None ☒ • No. of Traffic Lanes: 2 • Width of Median: None • Width of Shoulder: Left: Right: • Width of Sidewalk: Left: Right: 3.5'± • Railing Type: None Left: Right • Railing Height: Left: Right	

SUBSTRUCTURE AND UNDERSIDE COMPONENTS	DESCRIPTION	CONDITION REMARKS
Abutments Types & Wingwalls	• Abutment Types: Concrete • Integral wingwalls [X] and/ or Headwalls [X]	RC headwalls, wingwalls, debris rack at inlet, cement sack at outlet
Bent	• Materials: • Number of bents: • Pier Wall Type [ ] Column Type [ ] • X-sectional Dimensions: • Skew at Bents:	n/a
Piling	• Not Visible [ ] Pile Type: • Pile Extension:	n/a
Abutment and/or Bent Footings	• Footings: Visible [ ] Not Visible [ ] • Invert slab: Yes [ ] No [X]	
Embankment Condition and Erosion Control Measures	Steep and eroding at the outlet area	
Road Under the Bridge	• None [ ] • No. of Traffic Lanes: • Width of Median: • Width of Shoulder: Left: Right • Width of Sidewalk: Left: Right	n/a

MISCELLANEOUS FEATURES	DESCRIPTION	REMARKS
Evidence of Previous Work	The headwall and debris rack system at inlet recently built by the adjacent resident	
Visible Utilities	• Gas [ ] Water [ ] Sewer [ ] • Electrical [ ] Telecommunication [ ] • Other Utilities: • Structure Lighting: • Manhole on Deck:	
Availability of Detours	Available	
Drainage Facilities on Structure	• None [ ] •	n/a
Drainage Facilities Under Structure		n/a
Existing Facilities at Structure	• Retaining Walls: None [ ] Integral [ ] Near Abuts [ ]	Inlet and about a half of culvert is in another private property
Visual Hydraulic Assessment – Fish Passage	Flow present [X] Fish Spawning Route [ ]	Small flow



Photo 3 – Looking upstream at the culvert's outlet



Photo 4 – Culvert view through the inlet



Photo 5 – Culver's inlet



Photo 6 – View through the outlet



Photo 5 – Culver's inlet in private property



Photo 6 – Inadequate railing at the outlet

MILL VALLEY STRUCTURE NO. 86

STRUCTURE NO. 86 - EAST BLITHEDALE AVENUE BRIDGE OVER ARROYO CORTE MADERA DEL PRESIDIO



Photo 1 - Street Level Looking East



Photo 2 - Street Level Looking West

SUMMARY & RECOMMENDATIONS

The Bridge was visually inspected by Manouchehr Mahmoudzadeh, PE, on April 1, 2020.

The field notes and photos are recorded in the subsequent pages of this section.

General Observations

1. The bridge, a reinforced concrete slab, is over 50 years old and of unknown foundations. There is evidence of two generations of bridge construction at the site in terms of original construction and subsequent widening at the site. There are cracks on various parts of structure and the joints between the abutments and adjacent retaining walls are filled with dirt and debris. There are signs of scour under the abutment walls. The NW abutment cantilevered wingwall, which is not monolithic with the abutment, has moved nearly 3 inches sideways at the top due to soil pressure and connectivity to the abutment.
2. There are several utility lines running under the bridge soffit, varying from 6” to 12” in diameter that also run through the joints. These lines may be in the 100-year flow.
3. Metal tube railing is substandard (<42”)
4. AC surfacing has several horizontal and longitudinal cracks on the bridge and pavement delineations have faded away. The cracks allow water to get through and trap moisture that will eventually find their way through cracks in the concrete, leaching the concrete chemical through.

Structure’s Qualitative Health & Serviceability Condition Score (0-100): < 60

Qualitative Estimate of Structure’s Safe Remaining Life: < 30 years

Recommendations

1. Replace or modify the metal tube railing to meet safe height requirement.
2. Clean joints and install joint seal for proper bridge thermal movements.
3. Repair all cracks at various parts of the structure and the scoured abutment wall base.
4. Remove AC surfacing to evaluate the extent of cracks and unsound deck concrete. Seal the deck with polyester concrete or methacrylate and do not pave over. Replace the approach AC pavement and transition it to the concrete deck surface starting 15 to 20 feet away from each bridge end.
5. Keep an eye on the leaning NE wingwall.

Urgency of Maintenance Needs

The work may be schedules for the next 1-5 years.

Approximate Cost of Rehabilitation or Repairs : $70,000

FIELD OBSERVATION NOTES

Observation Date and Time: 4-1-20, 3:30 p.m. Caltrans District: 4 County: Marin

Facility Carried: E. Blithedale Ave Feature Intersected: Arroyo Corte Madera Bridge [X] Culvert [ ]

Mill Valley Crossing No: 86 Caltrans Bridge No: _____ Year Built: _____

Total Width: 48'-6" Total Length: 14' No. of Spans (Bridge): 1 No. of Chambers (Culvert): _____

Site Coordinates (Apple iPhone): 37° 54' 14" N & 122° 32' 21" W Weather: Clear

Street Posted for: Truck Weight Limit [ ] Speed Limit [ ] Nearest Postal Address: #307 E. Blithedale

SUPERSTRUCTURE AND TOPSIDE COMPONENTS	DESCRIPTION	CONDITION REMARKS
Superstructure Basics	• Structure Type & Materials: RC Slab • Alignment: Curved [ ] Tangent [X] • Superstructure Depth: 15" • Span Lengths: 13' (@Creek bed) • Waterway Opening Height: 7'-6"± • Skew at Abutments: 10°± • Curb-to-Curb Width: 32'-4" • Expansion Joints: n/a • Culvert ϕ or Dimensions: n/a	There are cracks in various parts of the bridge and spalled area on the soffit. Signs of abutment scour are visible.
Railings, Sidewalks & Curbs	• Railing Type: Metal Tube Left [x] Right [x] • Railing Height: Left 36" Right 36" • Sidewalks on both side(s) • Width of Sidewalk: Left: 9' Right: 5'-6" • Curb Height: 6" and varies • Median Barrier: Yes [ ] No: [X]	Railing is substandard
Deck Surface	• AC [X] Concrete [ ] Wood [ ]	AC in poor condition
Span Hinges	• None [X]	
Restrainers	At: Abutments [ ] Bents [ ] None [X]	
Soffit Opening Locations	• None [X]	
Traffic Lanes on Bridge	• No. of Traffic Lanes: 1 lane in each direction • Width of Median: None • Width of Shoulder, Left: 4' Right: 3'	
Approaches	• Approach Slab at: BB [ ] EB [ ] None [x] • No. of Traffic Lanes: 2 • Width of Median: None • Width of Shoulder: Left: 4' Right: 3' • Width of Sidewalk: Left: 9' Right:5'-6" • Railing Type: None Left [ ] Right [ ] • Railing Height: Left: Right:	Approach AC is in poor condition as well

SUBSTRUCTURE AND UNDERSIDE COMPONENTS	DESCRIPTION	CONDITION REMARKS
Abutments Types & Wingwalls	• Abutment Types: Concete • Integral wingwalls [X] and/ or Headwalls [ ]	Signs of abutment wall scour, The NE cantilevered wingwall has deflected sideways.
Bent	• Materials: • Number of bents: • Pier Wall Type [ ] Column Type [ ] • X-sectional Dimensions: • Skew at Bents:	n/a
Piling	• Not Visible [X] Pile Type: • Pile Extension:	
Abutment and/or Bent Footings	• Footings: Visible [ ] Not Visible [X] • Invert slab: Yes [X] No [ ]	
Embankment Condition and Erosion Control Measures	Rock Slope protection covered with vegetation.	
Road Under the Bridge	• None [ ] • No. of Traffic Lanes: • Width of Median: • Width of Shoulder: Left: Right • Width of Sidewalk: Left: Right	n/a

MISCELLANEOUS FEATURES	DESCRIPTION	REMARKS
Evidence of Previous Work	[ ] Seismic Retrofit [ ] Rehab & Repairs	
Visible Utilities	• Gas [X] Water [X] Sewer [X] • Electrical [X] Telecommunication [X] • Other Utilities: • Structure Lighting: • Manhole on Deck:	There are several utility lines varying 6” to 12” in diameter running under the soffit.
Availability of Detours	Detour possible	
Drainage Facilities on Structure	• None [X] •	
Drainage Facilities Under Structure	None	
Existing Facilities at Structure	• Retaining Walls: None [ ] Integral [ ] Near Abuts [X]	Retaining walls at either end of the bridge
Visual Hydraulic Assessment – Fish Passage	Flow present [X] Fish Spawning Route [ ]	



Photo 4 – View of substructure & vegetation growth



Photo 4 – Sideway movement of NW wingwall relative to bridge is evident in the foreground



Photo 5 – View of substructure, utility lines and two generations of side-by-side bridges



Photo 6 – View of downstream of the bridge



Photo 7 – View of poor quality AC on bridge deck



Photo 8 – View of substandard railing



Photo 9 – Adjacent park

MILL VALLEY STRUCTURE NO. 87

STRUCTURE NO. 87 - FERN AVE BRIDGE OVER ARROYO CORTE MADERA DEL PRESIDIO



Photo 1 - Street Level Looking North



Photo 2 - Street Level Looking South

SUMMARY & RECOMMENDATIONS

The Bridge was visually inspected by Manouchehr Mahmoudzadeh, PE, on April 1, 2020 & June 1, 2020.

The field notes and photos are recorded in the subsequent pages of this section.

General Observations

The bridge, a single-span reinforced concrete slab on concrete walls, is likely over 80 years old. The bridge foundations at the abutments are unknown. There are multiple spalled concrete areas with rebar exposed at the edge of soffit, possibly due to the poor quality of the original concrete and workmanship, as well as abrasion by the flows. The concrete deck and the travelway surface, the AC approaches and curbs are in good condition. Because of a longitudinal crack in the middle of the deck, the deck was chain-tested for unsound concrete, which indicated no such condition.

The concrete railings appear to be of a separate vintage and substandard in height (<42”). Below them, the deck beams are severely distressed and rebar is exposed at the soffit. This condition is unsafe.

There are some debris including concrete chunks and branches impeding water flow.

Structure’s Qualitative Health & Serviceability Condition Score (0-100): < 40

Qualitative Estimate of Structure’s Safe Remaining Life: < 15 years

Recommendations

1. Repair spalled sections at the edge of soffit to improve serviceability of the bridge.
2. Repair the concrete railings and add handrails to bring them up to a better standard and improve public safety.
3. Remove bushes and debris to alleviate water flow impedance.

Urgency of Maintenance Needs

The work on the major recommended repairs (Nos. 1 & 2 above) to the bridge should be top priority.

Item 3 should be done by the maintenance crews.

Approximate Cost of Rehabilitation or Repairs: $42,000

FIELD OBSERVATION NOTES

Observation Date and Time: 4-1-20, 9:30 a.m. Caltrans District: 4 County: Marin

Facility Carried: Fern Ave Feature Intersected: Arroyo Corte Madera Bridge [X] Culvert [ ]

Mill Valley Crossing No: 87 Caltrans Bridge No: _____ Year Built: _____

Total Width: 34' Total Length: 17' No. of Spans (Bridge): 1 No. of Chambers (Culvert): _____

Site Coordinates (Apple iPhone): 37° 53' 58" N & 122° 32' 10" W Weather: Sunny & Clear

Street Posted for: Truck Weight Limit [ ] Speed Limit [ ] Nearest Postal Address: Catalpa Ave

SUPERSTRUCTURE AND TOPSIDE COMPONENTS	DESCRIPTION	CONDITION REMARKS
Superstructure Basics	• Structure Type & Materials: RC Slab • Alignment: Curved [ ] Tangent [X] • Superstructure Depth: 15" • Span Lengths: 16' • Waterway Opening Height: 4'± • Skew at Abutments: 30° • Curb-to-Curb Width: 23'-6" • Expansion Joints: AC/Concrete saw cut • Culvert ϕ or Dimensions: n/a	Concrete spalled and rebar exposed at edge soffit on both sides.
Railings, Sidewalks & Curbs	• Railing Type: Conc Left [X] Right [X] • Railing Height: 3' Left [X] Right [X] • Sidewalks on both side(s) • Width of Sidewalk: Left: 5'-3" Right: 5'-3" • Curb Height: 3" • Median Barrier: Yes [ ] No: [X]	Railings on the bridge ire substandard, severely spalled and in an unsafe condition.
Deck Surface	• AC [ ] Concrete [X] Wood [ ]	
Span Hinges	• None [X]	
Restrainers	At: Abutments [ ] Bents [ ] None [X]	
Soffit Opening Locations	• None [X]	
Traffic Lanes on Bridge	• No. of Traffic Lanes: 2 • Width of Median: • Width of Shoulder, Left: 0" Right: 0"	
Approaches	• Approach Slab at: BB [ ] EB [ ] None [X] • No. of Traffic Lanes: 2 • Width of Median: None • Width of Shoulder: Left: 0" Right: 0" • Width of Sidewalk: Left: 5'-3" Right: 5'-3" • Railing Type: None Left [ ] Right [ ] • Railing Height: Left: Right:	

SUBSTRUCTURE AND UNDERSIDE COMPONENTS	DESCRIPTION	CONDITION REMARKS
Abutments Types & Wingwalls	• Abutment Types: Concrete • Integral wingwalls [X] and/ or Headwalls: [ ]	Short wingwalls
Bent n/a	• Materials: • Number of bents: • Pier Wall Type [ ] Column Type [ ] • X-sectional Dimensions: • Skew at Bents:	
Piling	• Not Visible [X] Pile Type: • Pile Extension:	
Abutment and/or Bent Footings	• Footings: Visible [ ] Not Visible [X] • Invert slab: Yes [X] No [ ]	
Embankment Condition and Erosion Control Measures	Channel is concrete-lined. Vegetation growth on the N. side of concrete lining	
Road Under the Bridge	• None [X] • No. of Traffic Lanes: • Width of Median: • Width of Shoulder: Left: Right • Width of Sidewalk: Left: Right	

MISCELLANEOUS FEATURES	DESCRIPTION	REMARKS
Evidence of Previous Work	[ ] Seismic Retrofit [ ] Rehab & Repairs	
Visible Utilities	• Gas [X] Water [ ] Sewer [X] • Electrical [ ] Telecommunication [X] • Other Utilities: Power & Comm. line OH • Structure Lighting: • Manhole on Deck:	6” steel casing possibly gas & 2” PVC casing possibly communication conduit along edge of deck.
Availability of Detours	Detour possible	
Drainage Facilities on Structure	• None [X] •	
Drainage Facilities Under Structure	RCP daylighting thru the curved retaining wall near the bridge.	
Existing Facilities at Structure	• Retaining Walls: None [ ] Integral [ ] Near Abuts [X]	Residential units adjust to the bridge
Visual Hydraulic Assessment – Fish Passage	Flow present [X] Fish Spawning Route [ ]	



Photo 3 – View of spalled edge of soffit looking east



Photo 4 – Severe concrete edge beam deterioration



Photo 5 –View of structure's edge



Photo 6 – Close up of view of edge of bridge



Photo 7 – Vegetation growth at bridge edge looking west



Photo 8 – Close up view of blockage looking west



Photo 9 – Storm drain NE corner



Photo 10 – Concrete channel lining meeting the bridge

MILL VALLEY STRUCTURE NO. 88

STRUCTURE NO. 88 - WALNUT AVENUE BRIDGE OVER ARROYO CORTE MADERA DEL PRESIDIO



Photo 1 - Street Level Looking North



Photo 2 - Street Level Looking South

SUMMARY & RECOMMENDATIONS

The Bridge was visually inspected by Manouchehr Mahmoudzadeh, PE, on April 1, 2020 & June 1, 2020.

The field notes and photos are recorded in the subsequent pages of this section.

General Observations

The bridge, a single-span reinforced concrete slab on concrete abutments, is possibly near a century old. Its abutment foundations are unknown. There is a spalled section at edge of soffit and rebar is exposed, potentially due to poor quality of the original concrete and abrasion by the flow of water. The driving surface on the deck has multiple longitudinal cracks that have been sealed. Cracks & spalled sections are visible at various sections of Abutment wall near utility lines & storm rains. Chain-testing of the bridge deck revealed small area of unsound concrete in an 18”x36” patched section at end of the bridge.

The concrete railing is severely spalled at its base with rebar exposed, and it is substandard in height (<42”).

Structure’s Qualitative Health & Serviceability Condition Score (0-100): < 30

Qualitative Estimate of Structure’s Safe Remaining Life: < 20 years

Recommendations

1. Repair spalled sections and seal cracks in the soffit and abutment wall to improve serviceability of the bridge.
2. Replace concrete railing to meet barrier height (42”) safety requirement; and improve public safety.
3. Remove bushes & debris to improve continuity in the flow in the creek.

Urgency of Maintenance Needs

The work on the major recommended repairs (Nos. 1 & 2 above) to the bridge should be top priority. Item 3 should be done by the maintenance crews.

Approximate Cost of Rehabilitation or Repair: $56,000

FIELD OBSERVATION NOTES

Observation Date and Time: 4-1-20, 10:25 a.m. Caltrans District: 4 County: Marin

Facility Carried: Walnut Ave Feature Intersected: Warner Canyon creek Bridge [X] Culvert [ ]

Mill Valley Crossing No: 88 Caltrans Bridge No: _____ Year Built: _____

Total Width: 34'-6" Total Length: 16' No. of Spans (Bridge): 1 No. of Chambers (Culvert): _____

Site Coordinates (Apple iPhone): 37° 54' 3" N & 122° 32' 14" W Weather: Sunny & Clear

Street Posted for: Truck Weight Limit [ ] Speed Limit [ ] Nearest Postal Address: #107 Walnut Ave

SUPERSTRUCTURE AND TOPSIDE COMPONENTS	DESCRIPTION	CONDITION REMARKS
Superstructure Basics	• Structure Type & Materials: RC Slab • Alignment: Curved [ ] Tangent [X] • Superstructure Depth: 15" • Span Lengths: 15' • Waterway Opening Height: 5'± • Skew at Abutments: 0° • Curb-to-Curb Width: 24'-6" • Expansion Joints: AC/Concrete saw cut • Culvert ϕ or Dimensions: n/a	Concrete spalled and rebar exposed at right edge soffit.
Railings, Sidewalks & Curbs	• Railing Type: Concrete Left [X] Right [X] • Railing Height: 3' Left [X] Right [X] • Sidewalks on both side(s) • Width of Sidewalk: Left: 5' Right: 5' • Curb Height: 3" • Median Barrier: Yes [ ] No: [X]	Longitudinal crack in the sidewalk needs to be examined and repaired.
Deck Surface	• AC [ ] Concrete [X] Wood [ ]	
Span Hinges	• None [X]	
Restrainers	At: Abutments [ ] Bents [ ] None [X]	
Soffit Opening Locations	• None [X]	
Traffic Lanes on Bridge	• No. of Traffic Lanes: 2 • Width of Median: • Width of Shoulder, Left: 0" Right: 0"	
Approaches	• Approach Slab at: BB [ ] EB [ ] None [X] • No. of Traffic Lanes: 2 • Width of Median: None • Width of Shoulder: Left: 0" Right: 0" • Width of Sidewalk: Left: 5' Right: 5' • Railing Type: None Left [ ] Right [ ] • Railing Height: Left: Right:	AC on approaches are in fair condition with a patch near one bridge end

SUBSTRUCTURE AND UNDERSIDE COMPONENTS	DESCRIPTION	CONDITION REMARKS
Abutments Types & Wingwalls	• Abutment Types: Concrete • Integral wingwalls [X] and/ or Headwalls: [ ]	Short wingwalls
Bent n/a	• Materials: • Number of bents: • Pier Wall Type [ ] Column Type [ ] • X-sectional Dimensions: • Skew at Bents:	
Piling	• Not Visible [X] Pile Type: • Pile Extension:	
Abutment and/or Bent Footings	• Footings: Visible [ ] Not Visible [X] • Invert slab: Yes [X] No [ ]	
Embankment Condition and Erosion Control Measures	Channel concrete lining is covered with vegetation	
Road Under the Bridge	• None [X] • No. of Traffic Lanes: • Width of Median: • Width of Shoulder: Left: Right • Width of Sidewalk: Left: Right	

MISCELLANEOUS FEATURES	DESCRIPTION	REMARKS
Evidence of Previous Work	[ ] Seismic Retrofit [ ] Rehab & Repairs	
Visible Utilities	• Gas [ ] Water [ ] Sewer [ ] • Electrical [X] Telecommunication [ ] • Other Utilities: OH power lines • Structure Lighting: • Manhole on Deck:	Utility line in 8” cast steel casing running along right edge of deck
Availability of Detours	Detour possible	
Drainage Facilities on Structure	• None [ ] Storm drain daylighting through one of the abutments	
Drainage Facilities Under Structure	Multiple 6” cast iron utility lines, under the bridge and along bottom edge of abutment	
Existing Facilities at Structure	• Retaining Walls: None [ ] Integral [ ] Near Abuts [X]	Residential units next to bridge
Visual Hydraulic Assessment – Fish Passage	Flow present [X] Fish Spawning Route [ ]	



Photo 3 – View of spalled section at edge of soffit Looking East



Photo 4 – Concrete deterioration along edge of soffit looking West



Photo 5 – Utility line, debris and broken away Invert slab looking west



Photo 6 – Close up View of exposed rusty rebar at edge of soffit



Photo 7 – Abutment Wall Cracks and spalled section neat utility line



Photo 8 – View of Bridge & vegetation growth looking West



Photo 9 – View of Bridge & vegetation growth looking east



Photo 10 – View of Bridge Looking SE

MILL VALLEY STRUCTURE NO. 89

STRUCTURE NO. 89 - LOCUST AVENUE BRIDGE OVER ARROYO CORTE MADERA DEL PRESIDIO



Photo 1 – Chaining Bridge Deck at Street Level, Looking North



Photo 2 - Street Level Looking South

SUMMARY & RECOMMENDATIONS

The Bridge was visually inspected by Manouchehr Mahmoudzadeh, PE, on April 1, 2020.

The field notes and photos are recorded in the subsequent pages of this section.

General Observations

The bridge, a single-span reinforced concrete slab on concrete abutments, is possibly near a century old. It is of unknown foundations at it abutments. There are severe spalled sections with extensive rebar exposure throughout the soffit, probably caused by the poor quality of the original concrete and abrasion by flow of water. The concrete deck's driving surface, the AC approaches and curbs are in fair condition. However, one sidewalk is severely cracked. In addition, cracks are visible in the abutment wall at various locations, extending from soffit to the invert slab.

The concrete railing is substandard and severely cracked on both sides of the bridge, apparently having been struck by a moving vehicle. These cracks pose serious threat to railing safety as well as bridge's life and serviceability.

Some evidence of scour is visible; the embankment at NE corner between the abutment and concrete block wall has been sliding in the creek, pilling up soil on the north side of the creek.

Structure's Qualitative Health & Serviceability Condition Score (0-100): < 30

Qualitative Estimate of Structure's Safe Remaining Life: < 20 years

Recommendations

1. Replace or repair and augment the railings to comply with safety requirements (42" min height); and improve public safety if and when any other work is necessary on them.
2. Repair spalled concrete sections, address corroded reinforcing steel at various parts of soffit, substructure; and seal cracks in the abutment walls.
3. Block and confine the embankment between abutment & concrete block wall to prevent sliding at NE corner of the bridge.
4. Repair crack in the sidewalk to prevent further settlement.
5. Remove debris and repair invert slab.

Urgency of Maintenance Needs

The work on the major repairs to the bridge (items 1-4) should be top priority. Item No. 5 should be picked up by maintenance crews.

Approximate Cost of Rehabilitation or Repairs : $70,000

FIELD OBSERVATION NOTES

Observation Date and Time: 4-1-20, 9:20 a.m. Caltrans District: 4 County: Marin

Facility Carried: Locust Ave Feature Intersected: Warner Canyon Creek Bridge [X] Culvert [ ]

Mill Valley Crossing No: 89 Caltrans Bridge No: _____ Year Built: _____

Total Width: 34' Total Length: 17' No. of Spans (Bridge): 1 No. of Chambers (Culvert): _____

Site Coordinates (Apple iPhone): 37° 53' 58" N & 122° 32' 10" W Weather: Sunny & Clear

Street Posted for: Truck Weight Limit [ ] Speed Limit [ ] Nearest Postal Address: Sycamore Ave

SUPERSTRUCTURE AND TOPSIDE COMPONENTS	DESCRIPTION	CONDITION REMARKS
Superstructure Basics	• Structure Type & Materials: RC Slab • Alignment: Curved [ ] Tangent [X] • Superstructure Depth: 15" • Span Lengths: 16' • Waterway Opening Height: 4'± • Skew at Abutments: 30° • Curb-to-Curb Width: 23'-6" • Expansion Joints: AC/Concrete saw cut • Culvert ϕ or Dimensions: n/a	Concrete spalled and rebar exposed at edges of soffit on both sides.
Railings, Sidewalks & Curbs	• Railing Type: Concrete Left [X] Right [X] • Railing Height: 3'-2" Left [X] Right [X] • Sidewalks on both side(s) • Width of Sidewalk: Left: 5'-3" Right: 5'-3" • Curb Height: 3" • Median Barrier: Yes [ ] No: [X]	Railings on the bridge are substandard and severely cracked, posing an unsafe condition. One sidewalk isseverely cracked.
Deck Surface	• AC [ ] Concrete [X] Wood [ ]	
Span Hinges	• None [X]	
Restrainers	At: Abutments [ ] Bents [ ] None [X]	
Soffit Opening Locations	• None [X]	
Traffic Lanes on Bridge	• No. of Traffic Lanes: 2 • Width of Median: • Width of Shoulder, Left: 0" Right: 0"	
Approaches	• Approach Slab at: BB [ ] EB [ ] None [X] • No. of Traffic Lanes: 2 • Width of Median: None • Width of Shoulder: Left: Right: • Width of Sidewalk: Left: 5'-3" Right: 5'-3" • Railing Type: None Left [ ] Right [ ] • Railing Height: Left: Right:	

SUBSTRUCTURE AND UNDERSIDE COMPONENTS	DESCRIPTION	CONDITION REMARKS
Abutments Types & Wingwalls	• Abutment Types: Conc • Integral wingwalls [X] and/ or Headwalls: [ ]	Short wingwalls
Bent n/a	• Materials: • Number of bents: • Pier Wall Type [ ] Column Type [ ] • X-sectional Dimensions: • Skew at Bents:	
Piling	• Not Visible [X] Pile Type: • Pile Extension:	
Abutment and/or Bent Footings	• Footings: Visible [ ] Not Visible [X] • Invert slab: Yes [X] No [ ]	Invert appears to have split in two halves at the entry upstream
Embankment Condition and Erosion Control Measures	Channel confined by concrete blocks and lining, vegetation growth on the N. side concrete lining	
Road Under the Bridge	• None [X] • No. of Traffic Lanes: • Width of Median: • Width of Shoulder: Left: Right • Width of Sidewalk: Left: Right	

MISCELLANEOUS FEATURES	DESCRIPTION	REMARKS
Evidence of Previous Work	[ ] Seismic Retrofit [ ] Rehab & Repairs	
Visible Utilities	• Gas [X] Water [ ] Sewer [X] • Electrical [X] Telecommunication [X] • Other Utilities: Power & Comm. line OH • Structure Lighting: • Manhole on Deck:	Several utility lines attached on the edge and hanging under the bridge
Availability of Detours	Detour possible	
Drainage Facilities on Structure	• None [X] •	
Drainage Facilities Under Structure	Storm drain line draining into the creek @ NE wingwall	
Existing Facilities at Structure	• Retaining Walls: None [ ] Integral [ ] Near Abuts [X]	Residential units adjust to the bridge
Visual Hydraulic Assessment – Fish Passage	Flow present [X] Fish Spawning Route [ ]	



Photo 3 – View of substructure and edge of soffit looking east



Photo 4 – Concrete railing looking west



Photo 5 – Concrete railing looking east



Photo 6 – View of creek width decreasing looking west



Photo 7 – View of badly cracked sidewalk



Photo 8 – Utility and storm drain outlet at the bridge



Photo 9 – Cracks in abutment near utility and storm drain



Photo 10 – Close up of cracks and spalled section in abutment



Photo 11 – Sliding at abutment NE corner of the bridge



Photo 12 – Evidence of Slide, scour and debris in the creek



Photo 13 – Evidence of scour and cracks in abutment near storm drain



Photo 14 – Concrete deterioration

MILL VALLEY STRUCTURE NO. 90

STRUCTURE NO. 90 - SYCAMORE AVENUE BRIDGE OVER WARNER CANYON CREEK



Photo 1 - Street Level Looking North



Photo 2 - Street Level Looking South

SUMMARY & RECOMMENDATIONS

The Bridge was visually inspected by Manouchehr Mahmoudzadeh, PE, on April 1, 2020.

The field notes and photos are recorded in the subsequent pages of this section.

General Observations

The bridge, a single-span reinforced concrete slab on concrete abutments, is possibly near a century old. Its abutment foundations are unknown. There are spalled concrete areas as well as cracks at various sections of soffit and abutment walls. Chaining the bridge deck revealed insignificant areas of unsound concrete. There are multiple cracks on AC surfacing at the joint along the beginning of the bridge.

Roots of a large tree at base in the right sidewalk near the bridge end have caused the sidewalk to settle and crack.

The invert is 4” to 6” higher on the east side, providing soil base for the roots of vegetation growth that has blocked the creek.

The concrete railing is substandard (height <42”).

Structure’s Qualitative Health & Serviceability Condition Score (0-100): < 20

Qualitative Estimate of Structure’s Safe Remaining Life: < 15 years

Recommendations

1. Repair spalled sections and seal cracks in the soffit and abutment wall to prevent further deterioration of concrete.
2. Augment the concrete railing to meet barrier height (42”) safety requirement and improve public safety if and when other work on the barrier is necessary.
3. Seal the cracks in AC at beginning of the bridge to prevent water penetrating further into to the base & subbase.
4. Inspect tree roots and direction of growth to determine whether it can penetrate to the bridge deck and abutment.
5. Remove debris and embankment erosion piling up at the SW corner of the invert.

Urgency of Maintenance Needs

The work on the major repairs to the bridge should be scheduled for the next 5 years.

Approximate Cost of Rehabilitation or Repairs: $35,000

FIELD OBSERVATION NOTES

Observation Date and Time: 4-1-20, 11:05 a.m. Caltrans District: 4 County: Marin

Facility Carried: Sycamore Ave Feature Intersected: Warner Canyon Creek Bridge [X] Culvert [ ]

Mill Valley Crossing No: 90 Caltrans Bridge No: _____ Year Built: _____

Total Width: 33'-6" Total Length: 15'-2" No. of Spans (Bridge): 1 No. of Chambers (Culvert): _____

Site Coordinates (Apple iPhone): 37° 53' 56" N & 122° 32' 12" W Weather: Sunny & Clear

Street Posted for: Truck Weight Limit [ ] Speed Limit [ ] Nearest Postal Address: #44 Sycamore Ave

SUPERSTRUCTURE AND TOPSIDE COMPONENTS	DESCRIPTION	CONDITION REMARKS
Superstructure Basics	• Structure Type & Materials: RC Slab • Alignment: Curved [ ] Tangent [X] • Superstructure Depth: 12" • Span Lengths: 14' • Waterway Opening Height: 3'± • Skew at Abutments: < 5° • Curb-to-Curb Width: 23'-6" • Expansion Joints: n/a • Culvert ϕ or Dimensions: n/a	
Railings, Sidewalks & Curbs	• Railing Type: Conc Left [X] Right [X] • Railing Height: 3' -2" Left [X] Right [X] • Sidewalks on both side(s) • Width of Sidewalk: Left: 5' Right: 5' • Curb Height: 3" • Median Barrier: Yes [ ] No: [X]	Railings severely cracked on both sides. Roots of a large tree at the base in sidewalk near EB
Deck Surface	• AC [X] Concrete [ ] Wood [ ]	AC severely cracked
Span Hinges	• None [X]	
Restrainers	At: Abutments [ ] Bents [ ] None [X]	
Soffit Opening Locations	• None [X]	
Traffic Lanes on Bridge	• No. of Traffic Lanes: 2 • Width of Median: • Width of Shoulder, Left: 0" Right: 0"	
Approaches	• Approach Slab at: BB [ ] EB [ ] None [X] • No. of Traffic Lanes: 2 • Width of Median: None • Width of Shoulder: Left: 0" Right: 0" • Width of Sidewalk: Left: 5' Right: 5' • Railing Type: None Left [ ] Right [ ] • Railing Height: Left: Right:	AC on approaches are in poor condition.

SUBSTRUCTURE AND UNDERSIDE COMPONENTS	DESCRIPTION	CONDITION REMARKS
Abutments Types & Wingwalls	• Abutment Types: Concrete • Integral wingwalls [X] and/ or Headwalls: [ ]	Short wingwalls
Bent n/a	• Materials: • Number of bents: • Pier Wall Type [ ] Column Type [ ] • X-sectional Dimensions: • Skew at Bents:	
Piling	• Not Visible [X] Pile Type: • Pile Extension:	
Abutment and/or Bent Footings	• Footings: Visible [ ] Not Visible [X] • Invert slab: Yes [X] No [ ]	Invert slab deteriorated
Embankment Condition and Erosion Control Measures	Channel concrete lining covered with vegetation	
Road Under the Bridge	• None [X] • No. of Traffic Lanes: • Width of Median: • Width of Shoulder: Left: Right • Width of Sidewalk: Left: Right	

MISCELLANEOUS FEATURES	DESCRIPTION	REMARKS
Evidence of Previous Work	[ ] Seismic Retrofit [ ] Rehab & Repairs	
Visible Utilities	• Gas [ ] Water [ ] Sewer [X] • Electrical [X] Telecommunication [ ] • Other Utilities: OH power lines • Structure Lighting: • Manhole on Deck:	Sewer in 12” steel casing running along RT edge
Availability of Detours	Detour possible	
Drainage Facilities on Structure	• None [X] •	
Drainage Facilities Under Structure	Along bottom of Abutment	
Existing Facilities at Structure	• Retaining Walls: None [ ] Integral [ ] Near Abuts [X]	Residential units adjacent to the bridge
Visual Hydraulic Assessment – Fish Passage	Flow present [X] Fish Spawning Route [ ]	



Photo 3 – View of substructure and sewer line looking east



Photo 4 – View of tree near the bridge NE corner



Photo 7 – View of utility line along bottom of the abutment



Photo 5 – View of substructure looking west



Photo 9 – Deteriorating concrete (edge of soffit)



Photo 10 – Evidence of scour & debris on the invert

MILL VALLEY STRUCTURE NO. 100

STRUCTURE NO. 100 - LOMITA AVENUE CROSSING OVER SUTTER MANOR CREEK



Photo 1 – Street level of Bridge Looking North



Photo 2 - Street Level Looking South

SUMMARY & RECOMMENDATIONS

The site was visually inspected by Manouchehr Mahmoudzadeh, PE, on April 28, 2020.

The field notes and photos are recorded in the subsequent pages of this section.

General Observations

The reinforced concrete box culvert is likely over 50 years old and runs under Lomita Avenue. There is a 36" round concrete storm drain culvert for surface runoff daylighting just to the south of the structure into the creek. The RCB culvert's inlet can be seen through the structure and it probably is in private property, which wasn't accessed. There is a storm drain inlet under the sidewalk, and a manhole on the sidewalk, all connected to the RCB culvert. There is a chain link fence at the edge of sidewalk, a metal tube railing at SW corner of the outlet, wingwalls made of solidified concrete sacks on both sides of the outlet and concrete creek bed surfacing on the lower banks of the creek after the outlet area. The horizontal concrete surface is broken up in pieces.

Street AC surfacing has some cracks and a patched section; and is in fair condition.

Structure's Qualitative Health & Serviceability Condition Score (0-100): < 70

Qualitative Estimate of Structure's Safe Remaining Life: < 40 years

Recommendations

1. Clean bushes & vegetation around the outlet of the main culvert to facilitate its operation
2. Repair broken concrete to restore invert slab or remove them.
3. Install bars or a similar device at storm drain inlet to prevent debris falling through in the creek.

Urgency of Maintenance Needs

The clearing of vegetation at the outlet (and inlet, by permission from property owner) should be done by maintenance crews. The work on the recommended items. 2 and 3 above should be scheduled in the next one to five years.

Approximate Cost of Rehabilitation or Repairs : $21,000

FIELD OBSERVATION NOTES

Observation Date and Time: 4-29-20, 9:10 a.m. Caltrans District: 4 County: Marin

Facility Carried: Lomita Ave Feature Intersected: Sutter Manor Creek Bridge [X] Culvert [ ]

Mill Valley Crossing No: 100 Caltrans Bridge No: _____ Year Built: _____

Total Width: ___ Total Length: 36' No. of Spans (Bridge): __ No. of Chambers (Culvert): 1

Site Coordinates (Apple iPhone): 37° 54' 22" N & 122° 31' 27" W Weather: Partly Cloudy

Street Posted for: Truck Weight Limit [ ] Speed Limit [ ] Nearest Postal Address: # 110 Lomita

SUPERSTRUCTURE AND TOPSIDE COMPONENTS	DESCRIPTION	CONDITION REMARKS
Superstructure Basics	• Structure Type & Materials: RC Box Culvert • Alignment: Curved [ ] Tangent [X] • Superstructure Depth: • Span Lengths: • Waterway Opening Height: • Skew at Abutments: 45° • Curb-to-Curb Width: 30' • Expansion Joints: n/a • Culvert ϕ or Dimensions: 4'x7' box, 36" RCP	4'x7' culvert 8" top slab and 4" side walls.
Railings, Sidewalks & Curbs	• Railing Type: Left: Right: Chain link • Railing Height: Left: Right: 6'-6" • Sidewalks on 1 side(s) • Width of Sidewalk: Left: Right: 5' • Curb Height: 6" • Median Barrier: Yes [ ] No: [X]	Concrete sidewalk
Deck Surface	• AC [X] Concrete [ ] Wood [ ]	AC is in fair condition
Span Hinges	• None [ ]	n/a
Restrainers	At: Abutments [ ] Bents [ ] None [ ]	n/a
Soffit Opening Locations	• None [ ]	n/a
Traffic Lanes on Structure	• No. of Traffic Lanes: 2 • Width of Median: • Width of Shoulder, Left: 3' Right: 3'	
Approaches	• Approach Slab at: BB [ ] EB [ ] None [X] 21 lane each direction • Width of Median: None • Width of Shoulder: Left: Right: • Width of Sidewalk: Left: Right: • Railing Type: None Left: Right: • Railing Height: Left: Right:	

SUBSTRUCTURE AND UNDERSIDE COMPONENTS	DESCRIPTION	CONDITION REMARKS
Abutments Types & Wingwalls	• Abutment Types: n/a • Integral wingwalls ☐ and/ or Headwalls: ☐	Sandbag wingwalls
Bent	• Materials: • Number of bents: • Pier Wall Type ☐ Column Type ☐ • X-sectional Dimensions: • Skew at Bents:	n/a
Piling	• Not Visible ☐ Pile Type: • Pile Extension:	n/a
Abutment and/or Bent Footings	• Footings: Visible ☐ Not Visible ☒ • Invert slab: Yes ☐ No ☐	Creek bed and lower banks at outlet are concrete-surfaced
Embankment Condition and Erosion Control Measures	Concrete sac wingwalls and concrete bank surfacing at the outlet	
Road Under the Bridge	• None ☐ • No. of Traffic Lanes: • Width of Median: • Width of Shoulder: Left: Right • Width of Sidewalk: Left: Right	n/a

MISCELLANEOUS FEATURES	DESCRIPTION	REMARKS
Evidence of Previous Work	☐ Seismic Retrofit ☐ Rehab & Repairs	
Visible Utilities	• Gas ☒ Water ☒ Sewer ☒ • Electrical ☒ Telecommunication ☒ • Other Utilities: • Structure Lighting: • Manhole on Deck:	The utilities marked were not necessarily all seen, but presumed to exist in residential area's street & sidewalk. There is a 30" concrete culvert storm drain also daylighting
Availability of Detours	Detour possible	
Drainage Facilities on Structure	• None ☒	
Drainage Facilities Under Structure	4 concrete culverts 12" diameter 2 on each abutment near BB & EB	
Existing Facilities at Structure	• Retaining Walls: None ☐ Integral ☐ Near Abuts ☐	
Visual Hydraulic Assessment – Fish Passage	Flow present ☒ Fish Spawning Route ☐	



Photo 3 – View of RCB culvert's outlet concrete sack riprap & fortification



Photo 4 – View of downstream of RCB Culvert and a 3' ϕ RCP daylighting at the site



Photo 5 – Outlet of the storm drain RCP and the lined channel



Photo 6 – View of 3' ϕ RCP's outlet & riprap



Photo 7 – A DI connected to the RCB culvert



Photo 8 – View of fenced off culverts' outlets in the creek



Photo 9 – Riprap at RCB culvert's wingwall



Photo 10 – A DI connected to the RCB culvert



Photo 11 – View of the inside turn in alignment of the RCB culvert upstream of the out let



Photo 12 – View of up the RCB culvert toward the inlet area in private property

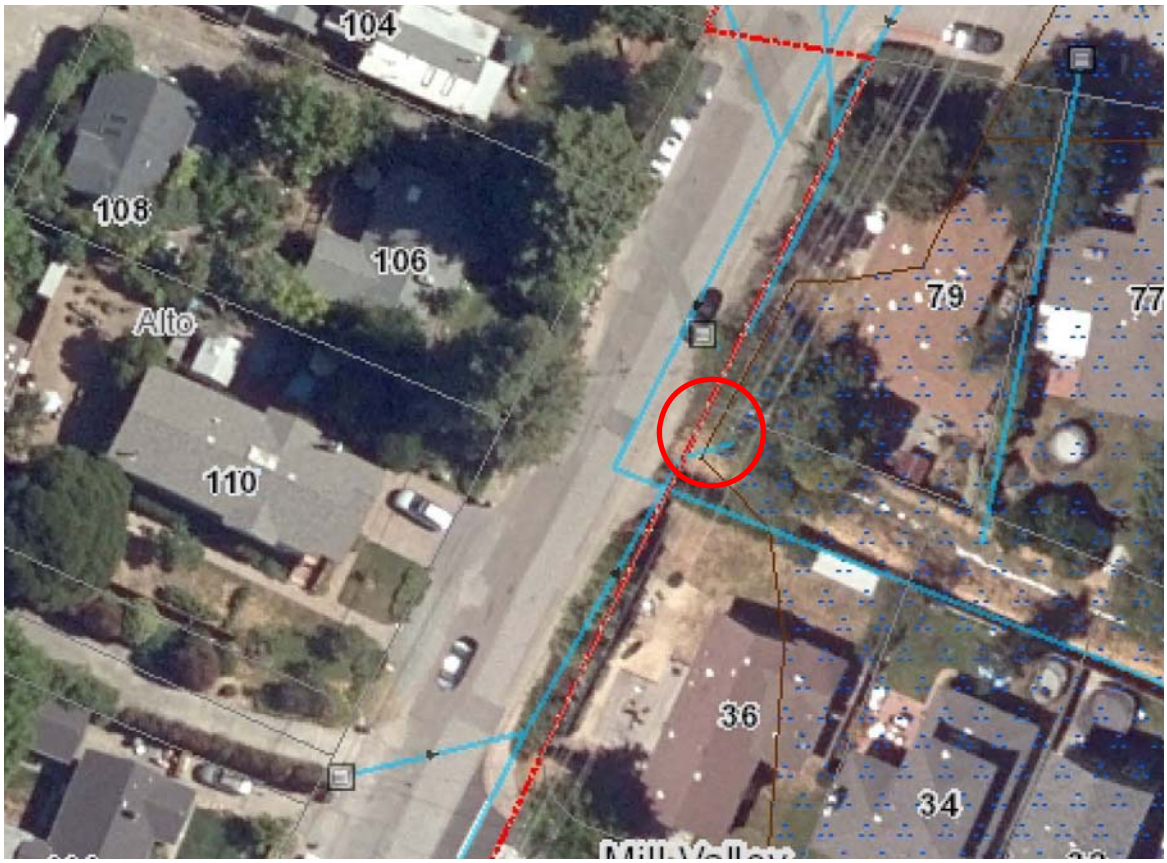

Photo 13 – MarinMap Schematic of storm drain piping with 3' ϕ RCP outlet encircled

MILL VALLEY STRUCTURE NO. 101

STRUCTURE NO. 101 - ASHFORD AVE BOX CULVERT AT SUTTER MANOR CREEK



Photo 1 – Street level of Bridge Looking East



Photo 2 - Street Level Looking West

SUMMARY & RECOMMENDATIONS

The site was visually inspected by Manouchehr Mahmoudzadeh, PE, on April 28, 2020.

The field notes and photos are recorded in the subsequent pages of this section.

General Observations

The structure, a reinforced concrete double box culvert, is likely over 50 years old. There are a total of five 12" storm drain concrete pipes draining in the creek, two at each on each culvert end and one at SW corner protected by concrete sacks at outlet. Concrete quality is good. Mud eroded from slopes has been piling up on the invert slab in both chambers as well as along the concrete wall on south side of the creek.

There is a 5'-6" tall chain link along right edge of deck; and 27' wood railing on the left edge of deck. There is speed limit (25 MPH) on the culvert. Despite some cracks, small potholes and patches, the AC surfacing is in fair condition.

Structure's Qualitative Health & Serviceability Condition Score (0-100): < 50

Qualitative Estimate of Structure's Safe Remaining Life: < 30 years

Recommendations

1. Clean mud off the invert to facilitate water flow and prevent potential blockage.
2. Seal cracks and fill potholes on AC surfacing.
3. Stabilize embankments on the West side of the bridge (either rock slope or sandbags) to alleviate mud piling up on the invert slab.
4. Replace / raise timber railing on the LT side of the bridge to comply with rail safety height requirement.

Urgency of Maintenance Needs

The work on the major repairs recommended should take place in the next 2-3 years

Approximate Cost of Rehabilitation or Repairs : $14,000

FIELD OBSERVATION NOTES

Observation Date and Time: 4-28-20, 5:10 p.m. Caltrans District: 4 County: Marin

Facility Carried: Ashford Ave Feature Intersected: Sutter Manor Creek Bridge [X] Culvert [ ]

Mill Valley Crossing No: 101 Caltrans Bridge No: _____ Year Built: _____

Total Width: ___ Total Length: 54' No. of Spans (Bridge): __ No. of Chambers (Culvert): 2

Site Coordinates (Apple iPhone): 37° 54' 15" N & 122° 31' 24" W Weather: Sunny & Clear

Street Posted for: Truck Weight Limit [ ] Speed Limit [X] Nearest Postal Address: E. Blithedale

SUPERSTRUCTURE AND TOPSIDE COMPONENTS	DESCRIPTION	CONDITION REMARKS
Superstructure Basics	• Structure Type & Materials: RC Double Box Culvert • Alignment: Curved [ ] Tangent [X] • Superstructure Depth: 12" • Span Lengths:7' • Waterway Opening Height: 4'± • Skew at Abutments: 0° • Curb-to-Curb Width: 41'-6" • Expansion Joints: n/a • Culvert ϕ or Dimensions: 4' x 14'	Mud on invert slab.
Railings, Sidewalks & Curbs	• Railing Type: Left: Timber Right: Chain link • Railing Height: Left: 5'-6" Right: 3' • Sidewalks on both side(s) • Width of Sidewalk: Left: 5' Right: 5' • Curb Height: 6" • Median Barrier: Yes [ ] No: [X]	Concrete sidewalk
Deck Surface	• AC [X] Concrete [ ] Wood [ ]	AC is in fair condition
Span Hinges	• None [ ]	n/a
Restrainers	At: Abutments [ ] Bents [ ] None [ ]	n/a
Soffit Opening Locations	• None [ ]	n/a
Traffic Lanes on Bridge	• No. of Traffic Lanes: 2 • Width of Median: • Width of Shoulder, Left: Right: 4'-6"	There are some cracks and small potholes
Approaches	• Approach Slab at: BB [ ] EB [ ] None [X] • No. of Traffic Lanes: 2 • Width of Median: None • Width of Shoulder: Left: 8' Right: 8' • Width of Sidewalk: Left: 5' Right: 5' • Railing Type: None Left: Right: • Railing Height: Left: Right:	

SUBSTRUCTURE AND UNDERSIDE COMPONENTS	DESCRIPTION	CONDITION REMARKS
Abutments Types & Wingwalls	• Abutment Types: Concrete • Integral wingwalls [X] and/ or Headwalls: [ ]	Sandbag wingwall at the west end
Bent	• Materials: • Number of bents: • Pier Wall Type [ ] Column Type [ ] • X-sectional Dimensions: Rec 6"x48" • Skew at Bents:	Thin concrete wall separating the 2 chambers
Piling	• Not Visible [ ] Pile Type: • Pile Extension:	n/a
Abutment and/or Bent Footings	• Footings: Visible [ ] Not Visible [ ] • Invert slab: Yes [X] No [ ]	
Embankment Condition and Erosion Control Measures	Sandbags on west side, concrete Wall on the east side.	
Road Under the Bridge	• None [ ] • No. of Traffic Lanes: • Width of Median: • Width of Shoulder: Left: Right • Width of Sidewalk: Left: Right	n/a

MISCELLANEOUS FEATURES	DESCRIPTION	REMARKS
Evidence of Previous Work	[ ] Seismic Retrofit [ ] Rehab & Repairs	
Visible Utilities	• Gas [X] Water [X] Sewer [X] • Electrical [X] Telecommunication [X] • Other Utilities: • Structure Lighting: • Manhole on Deck:	The utilities marked were not necessarily all seen, but presumed to exist in residential area's street & sidewalk. There is 12" concrete culvert on NW corner of the bridge
Availability of Detours	Detour possible	
Drainage Facilities on Structure	• None [X]	
Drainage Facilities Under Structure	4 concrete culverts 12" diameter, 2 on each abutment near BB & EB	BB = Begin Bridge EB = End Bridge
Existing Facilities at Structure	• Retaining Walls: None [ ] Integral [ ] Near Abuts [X]	Maintenance concrete ramp @ NE corner
Visual Hydraulic Assessment – Fish Passage	Flow present [X] Fish Spawning Route [ ]	



Photo 3 – View of culvert's outlet and wood railing looking north



Photo 4 – View of sandbag wingwall at NE corner



Photo 5 – View of storm drain at SW corner



Y

Photo 6 – View of pier wall and mud on the invert slab



Photo 7 – View of ramp and chain link fence at inlet area



Photo 8 – View of storm drain culverts under the bridge



Photo 9 – View mud & debris on the invert slab



Photo 10 – View joint between abutment & ramp

MILL VALLEY STRUCTURE NO. 102

STRUCTURE NO. 102 - E. BLITHEDALE AVENUE CULVERT AT SUTTER MANOR CREEK



Photo 1 – View Over the Structure Looking East



Photo 2 - Street Level Looking West

SUMMARY & RECOMMENDATIONS

The site was visually inspected by Manouchehr Mahmoudzadeh, PE, on April 28, 2020.

The field notes and photos are recorded in the subsequent pages of this section.

General Observations

The structure is a reinforced concrete box culvert and likely over 50 years old. The concrete is in good condition. The culvert's alignment meanders NE under E. Blithedale Ave and there is a pedestrian path past the west end of it. There is guardrail on side of the road and a broken wood railing along the edge of creek. The AC surfacing is in good condition

Structure's Qualitative Health & Serviceability Condition Score (0-100): < 70

Qualitative Estimate of Structure's Safe Remaining Life: < 30 years

Recommendations

1. Clean bushes and debris near the edges of the culvert to prevent their blocking the creek and adversely impacting the flow. The work may be done by City maintenance crews.
2. Repair wood railing along edge of creek in the service station parking lot between this structure and adjacent structure.

Urgency of Maintenance Needs

The work on the major repairs to the culvert should be priority within the next five years.

Approximate Cost of Rehabilitation or Repairs : $35,000

FIELD OBSERVATION NOTES

Observation Date and Time: 4-28-20, 4:50 p.m. Caltrans District: 4 County: Marin

Facility Carried: Miller Ave Feature Intersected: Sutter Manor Creek Bridge [X] Culvert [ ]

Mill Valley Crossing No: 102 Caltrans Bridge No: _____ Year Built: _____

Total Width: _____ Total Length: 54' No. of Spans (Bridge): __ No. of Chambers (Culvert): 1

Site Coordinates (Apple iPhone): 37° 53' 13" N & 122° 31' 22" W Weather: Sunny & Clear

Street Posted for: Truck Weight Limit [ ] Speed Limit [ ] Nearest Postal Address: Ashford

SUPERSTRUCTURE AND TOPSIDE COMPONENTS	DESCRIPTION	CONDITION REMARKS
Superstructure Basics	• Structure Type & Materials: RC Box Culvert • Alignment: Curved [ ] Tangent [X] • Superstructure Depth: • Span Lengths: 3' at Entrance 5' at exit • Waterway Opening Height: 20" • Skew at Abutments: approx. 0° • Curb-to-Curb Width: 54' • Expansion Joints: n/a • Culvert ϕ or Dimensions: n/a	The structure depth is 20" at the inlet & 12" at the outlet.
Railings, Sidewalks & Curbs	• Railing Type: Left: [ ] Right: [ ] • Railing Height: Left: Right: • Sidewalks on ___side(s) • Width of Sidewalk: Left: Right: • Curb Height: 6" • Median Barrier: Yes: [ ] No: [ ]	There are no railings on this structure, just 8" concrete parapet at both edges
Deck Surface	• AC [X] Concrete [ ] Wood [ ]	AC is in good condition
Span Hinges	• None [ ]	n/a
Restrainers	At: Abutments [ ] Bents [ ] None [ ]	n/a
Soffit Opening Locations	• None [ ]	n/a
Traffic Lanes on Bridge	• No. of Traffic Lanes: 3 (including turn lane) • Width of Median: • Width of Shoulder: Left: 5' Right: 5'	There is Lt turn lane near Ashford Ave
Approaches	• Approach Slab at: BB [ ] EB [ ] None [X] • No. of Traffic Lanes: 2 • Width of Median: None • Width of Shoulder: Left: Right: • Width of Sidewalk: Left: Right: • Railing Type: Left: Right: • Railing Height: Left: Right:	

SUBSTRUCTURE AND UNDERSIDE COMPONENTS	DESCRIPTION	CONDITION REMARKS
Abutments Types & Wingwalls	• Abutment Types: Conc • Integral wingwalls [X] and / or Headwalls: [X]	6" culvert side walls @ outlet and concrete wingwall @ inlet
Bent	• Materials: • Number of bents: • Pier Wall Type [ ] Column Type [ ] • X-sectional Dimensions: • Skew at Bents: <	n/a
Piling n/a	• Not Visible [ ] Pile Type: • Pile Extension:	n/a
Abutment and/or Bent Footings n/a	• Footings: Visible [ ] Not Visible [ ] • Invert slab: Yes [ ] No [ ]	n/a
Embankment Condition and Erosion Control Measures	Natural / original ground with no slope protection at either end of the bridge.	
Road Under the Bridge	• None [ ] • No. of Traffic Lanes: • Width of Median: • Width of Shoulder: Left: Right • Width of Sidewalk: Left: Right	n/a

MISCELLANEOUS FEATURES	DESCRIPTION	REMARKS
Evidence of Previous Work	[ ] Seismic Retrofit [ ] Rehab & Repairs	
Visible Utilities	• Gas [X] Water [X] Sewer [X] • Electrical [X] Telecommunication [X] • Other Utilities: • Structure Lighting: • Manhole on Deck:	The utilities marked were not necessarily all seen, but presumed to exist in residential area's street & sidewalk
Availability of Detours	Possible	
Drainage Facilities on Structure	•	
Drainage Facilities Under Structure	None	
Existing Facilities at Structure	• Retaining Walls: None [X] Integral [ ] Near Abuts [ ]	
Visual Hydraulic Assessment – Fish Passage	Flow present [X] Fish Spawning Route [ ]	



Photo 3 – View of Structure looking East



Photo 4 – View of Structure looking West



Photo 5 – Close up view of the culvert



Photo 6 – View wood railing along edge of the creek



Photo 7 – View of wood railing in the parking lot



Photo 8 – View guardr**ail on the left side of the road**

MILL VALLEY STRUCTURE NO. 103

STRUCTURE NO. 103 - E. BLITHEDALE AVE BRIDGE OVER SUTTER MANOR CREEK



Photo 1 – Street level of Bridge Looking North



Photo 2 - Street Level Looking South

SUMMARY & RECOMMENDATIONS

The Bridge was visually inspected by Manouchehr Mahmoudzadeh, PE, on April 28, 2020.

The field notes and photos are recorded in the subsequent pages of this section.

General Observations

The bridge, a two-span reinforced concrete slab, is likely over 50 years old and of unknown foundations. The bridge is one of the 3 structures running under driveways to a shopping center at the corner of E. Blithedale & Lomita Avenues. There are cracks, spalls and exposed rebar at multiple locations in various parts of deck and substructure. Evidence of scour and erosion is clearly visible at the bottom of the walls. AC surfacing is in good condition. However, metal beam guardrail (MBGR) and a sign on one side of the road have been struck and some MBGR posts have pulled out of foundation.

Structure's Qualitative Health & Serviceability Condition Score (0-100): < 50

Qualitative Estimate of Structure's Safe Remaining Life: < 25 years

Recommendations

1. Remove the riprap rocks in the creek bed around the east side of the bridge and put them back on the slope, as intended.
2. Repair all spalls and cracked sections by removing and patching unsound concrete (on bridge deck, abutments, pier wall) to improve life and serviceability of the bridge.
3. Repair / replace the guardrail to enhance safety for traffic to & from E. Blithedale Avenue to the shopping center.

Urgency of Maintenance Needs

The work on the guardrail (item 3 above) should be top priority. Item 2 should be scheduled for the next five years and item 1 can be done by City's maintenance forces.

Approximate Cost of Rehabilitation or Repairs : $14,000

FIELD OBSERVATION NOTES

Observation Date and Time: 4-28-20, 3:30 p.m. Caltrans District: 4 County: Marin

Facility Carried: E. Blithedale Ave Feature Intersected: Sutter Manor Creek Bridge [X] Culvert [ ]

Mill Valley Crossing No: 103 Caltrans Bridge No: _____ Year Built: _____

Total Width: 56' Total Length: 14'-8" No. of Spans (Bridge): 2 No. of Chambers (Culvert): _____

Site Coordinates (Apple iPhone): 37° 54' 9" N & 122° 31' 29" W Weather: Sunny & Clear

Street Posted for: Truck Weight Limit [ ] Speed Limit [ ] Nearest Postal Address: # 731 E. Blithedale

SUPERSTRUCTURE AND TOPSIDE COMPONENTS	DESCRIPTION	CONDITION REMARKS
Superstructure Basics	• Structure Type & Materials: RC Slab • Alignment: Curved [ ] Tangent [X] • Superstructure Depth: 18" • Span Lengths:6' • Waterway Opening Height: 8'± • Skew at Abutments: 0° • Curb-to-Curb Width: n/a' • Expansion Joints: n/a • Culvert ϕ or Dimensions: n/a	Concrete is deteriorating at various location of the bridge deck and substructure. Scour present at the bottom of supports
Railings, Sidewalks & Curbs	• Railing Type: MBGR Left: [X] Right: [X] • Railing Height: Left: 36" Right: 36" • Sidewalks on __side(s) • Width of Sidewalk: Left: Right: • Curb Height: 6" Concrete parapet • Median Barrier: Yes [ ] No: [X]	Damaged MBGR RT side of the road.
Deck Surface	• AC [X] Concrete [ ] Wood [ ]	AC is in good condition
Span Hinges	• None [X]	
Restrainers	At: Abutments [ ] Bents [ ] None [X]	
Soffit Opening Locations	• None [X]	
Traffic Lanes on Bridge	• No. of Traffic Lanes: 2 • Width of Median: • Width of Shoulder: Left: Right: 4'-6"	
Approaches	• Approach Slab at: BB [ ] EB [ ] None [X] • No. of Traffic Lanes: 2 • Width of Median: None • Width of Shoulder: Left: Right: • Width of Sidewalk: Left: Right: • Railing Type: None Left: Right: • Railing Height: Left: Right:	There is approximately 8' of width between edge of deck and MBGR on each side.

SUBSTRUCTURE AND UNDERSIDE COMPONENTS	DESCRIPTION	CONDITION REMARKS
Abutments Types & Wingwalls	• Abutment Types: Concrete • Integral wingwalls [X] and/ or Headwalls: [ ]	Eroded due to scour
Bent	• Materials: • Number of bents: • Pier Wall Type [X] Column Type [ ] • X-sectional Dimensions: Rec 8”x96” • Skew at Bents:	Cracks & erosion at the bottom half of Pier wall is visible
Piling	• Not Visible [X] Pile Type: • Pile Extension:	
Abutment and/or Bent Footings	• Footings: Visible [ ] Not Visible [X] • Invert slab: Yes [ ] No [X]	
Embankment Condition and Erosion Control Measures	Covered by rock Slope protection (some of which has fallen in the waterway), sacked concrete wall and vegetation	
Road Under the Bridge	• None [X] • No. of Traffic Lanes: • Width of Median: • Width of Shoulder: Left: Right • Width of Sidewalk: Left: Right	

MISCELLANEOUS FEATURES	DESCRIPTION	REMARKS
Evidence of Previous Work	[ ] Seismic Retrofit [ ] Rehab & Repairs	
Visible Utilities	• Gas [ ] Water [ ] Sewer [X] • Electrical [ ] Telecommunication [ ] • Other Utilities: • Structure Lighting: • Manhole on Deck:	12” storm drain metal culvert drains in the creek NE corner of the bridge
Availability of Detours	Detour possible	
Drainage Facilities on Structure	• None [X]	
Drainage Facilities Under Structure	None	
Existing Facilities at Structure	• Retaining Walls: None [ ] Integral [ ] Near Abuts [ ]	
Visual Hydraulic Assessment – Fish Passage	Flow present [X] Fish Spawning Route [ ]	



Photo 3 – View of bridge and damaged MBGR



Photo 4 – View of storm drain metal culvert



Photo 5 – View of abutment erosion NW corner



Photo 6 – Vew of pier wall and deteriorated section



Photo 7 – View of abutment and damaged guardrail



Photo 8 – View of sacked concrete bag slope protection



Photo 9 – View substructure and slope protection looking west



Photo 10 – View of deck concrete at left edge



Photo 11 – View of abutment's NE corner



Photo 12 – View of abutment's SE corner

MILL VALLEY STRUCTURE NO. 104

STRUCTURE NO. 104 - E. BLITHEDALE AVE BRIDGE OVER SUTTER MANOR CREEK



Photo 1 – View of Bridge Looking West



Photo 2 – View of Bridge Looking East

SUMMARY & RECOMMENDATIONS

The site was visually inspected by Manouchehr Mahmoudzadeh, PE, on April 28, 2020.

The field notes and photos are recorded in the subsequent pages of this section.

General Observations

The bridge, a two-span reinforced concrete slab, is over 50 years old and meanders SE under E. Blithedale Ave for over 300'. The bridge's concrete quality is poor and severely deteriorated by years flow abrasion, scour effects and wear and tear. There are cracks, spalls and exposed corroded rebar at multiple locations on various parts of deck and substructure.

Approximately half of the structure width is occupied by the roadway and the rest is covered with embankment (bushes & trees), preventing reasonable access to inspect bridge deck thoroughly. Surface water may have penetrated through cracks causing corrosion in the bar reinforcing steel.

AC surfacing is in good condition.

Structure's Qualitative Health & Serviceability Condition Score (0-100): < 40

Qualitative Estimate of Structure's Safe Remaining Life: < 15 years

Recommendations

1. Clean bushes & vegetation to expose top of bridge deck for future detailed inspection.
2. Remove deteriorated portions of bridge deck & substructure (pier wall & abutment) and reconstruct to improve life and serviceability of the bridge.

Urgency of Maintenance Needs

The work on the major repairs to the bridge (item 2 above) should be scheduled for the next five years. The bushed may be cleared by maintenance forces.

Approximate Cost of Rehabilitation or Repairs : $35,000

FIELD OBSERVATION NOTES

Observation Date and Time: 4-28-20, 4:10 p.m. Caltrans District: 4 County: Marin

Facility Carried: E. Blithedale Ave Feature Intersected: Sutter Manor Creek Bridge [X] Culvert [ ]

Mill Valley Crossing No: 104 Caltrans Bridge No: _____ Year Built: _____

Total Width: 300' Total Length: 16'-8" No. of Spans (Bridge): 2 No. of Chambers (Culvert): _____

Site Coordinates (Apple iPhone): 37° 54' 6" N & 122° 31' 31" W Weather: Sunny & Clear

Street Posted for: Truck Weight Limit [ ] Speed Limit [ ] Nearest Postal Address: 715 E. Blithedale

SUPERSTRUCTURE AND TOPSIDE COMPONENTS	DESCRIPTION	CONDITION REMARKS
Superstructure Basics	• Structure Type & Materials: RC Slab • Alignment: Curved [ ] Tangent [X] • Superstructure Depth: 9" • Span Lengths:7'-9'' • Waterway Opening Height: 4'-3"± • Skew at Abutments: 0° • Curb-to-Curb Width: n/a' • Expansion Joints: n/a • Culvert ϕ or Dimensions: n/a	Concrete is severely deteriorated at various location of the bridge deck and substructure.
Railings, Sidewalks & Curbs	• Railing Type: MBGR Left: [X] Right :[X] • Railing Height: Left: 36" Right: 36" • Sidewalks on ___side(s) • Width of Sidewalk: Left: Right: • Curb Height: 6" Concrete parapet • Median Barrier: Yes [ ] No: [X]	
Deck Surface	• AC [X] Concrete [ ] Wood [ ]	AC is in good condition
Span Hinges	• None [X]	
Restrainers	At: Abutments [ ] Bents [ ] None [X]	
Soffit Opening Locations	• None [X]	
Traffic Lanes on Bridge	• No. of Traffic Lanes: 2 • Width of Median: • Width of Shoulder, Left: Right:	
Approaches	• Approach Slab at: BB [ ] EB [ ] None [X] • No. of Traffic Lanes: 2 • Width of Median: None • Width of Shoulder: Left: Right: • Width of Sidewalk: Left: Right: • Railing Type: None Left: Right: • Railing Height: Left: Right:	

SUBSTRUCTURE AND UNDERSIDE COMPONENTS	DESCRIPTION	CONDITION REMARKS
Abutments Types & Wingwalls	• Abutment Types: Concrete • Integral wingwalls ☐ and/ or Headwalls: ☐	Wingwalls are made from stacked solid concrete bags
Bent	• Materials: • Number of bents: • Pier Wall Type ☒ Column Type ☐ • X-sectional Dimensions: Rec 6”x51” • Skew at Bents:	Cracked, scoured under and abraded
Piling	• Not Visible ☒ Pile Type: • Pile Extension:	
Abutment and/or Bent Footings	• Footings: Visible ☐ Not Visible ☒ • Invert slab: Yes ☐ No ☒	
Embankment Condition and Erosion Control Measures	Sandbag Slope protection & vegetation	
Road Under the Bridge	• None ☒ • No. of Traffic Lanes: • Width of Median: • Width of Shoulder: Left: Right • Width of Sidewalk: Left: Right	

MISCELLANEOUS FEATURES	DESCRIPTION	REMARKS
Evidence of Previous Work	☐ Seismic Retrofit ☐ Rehab & Repairs	
Visible Utilities	• Gas ☐ Water ☐ Sewer ☐ • Electrical ☐ Telecommunication ☐ • Other Utilities: • Structure Lighting: • Manhole on Deck:	
Availability of Detours	Detour possible	
Drainage Facilities on Structure	• None ☒	
Drainage Facilities Under Structure	None	
Existing Facilities at Structure	• Retaining Walls: None ☐ Integral ☐ Near Abuts ☐	
Visual Hydraulic Assessment – Fish Passage	Flow present ☒ Fish Spawning Route ☐	



Photo 3 – View bridge and wingwalls



Photo 4 – View of deck and pier concrete deterioration looking west



Photo 5 – View of creek between adjacent structures looking east



Photo 6 – View of bridge and deteriorated concrete looking east



Photo 7 – View of concrete sack slope protection SE corner



Photo 8 – View of concrete sack slope protection SW corner

MILL VALLEY STRUCTURE NO. 105

STRUCTURE NO. 105 - E. BLITHEDALE AVE RAMP OVER SUTTER MANOR CREEK



Photo 1 – Street level of Bridge Looking North



Photo 2 - Street Level Looking South

SUMMARY & RECOMMENDATIONS

The site was visually inspected by Manouchehr Mahmoudzadeh, PE, on April 28, 2020.

The field notes and photos are recorded in the subsequent pages of this section.

General Observations

The double corrugated metal pipe (CMP) culverts are 6' in diameter and likely over 50 years old. Both chambers are partially filled with mud, hindering the flow of water through. The creek banks are low here, just higher than the culverts. The road on top of the culverts is protected from the drop-off with guardrail on one side. The AC surfacing is in good condition. The other side is separated from a grassy area over the culverts by a low curb. The guardrail is of lighter construct and not a standard MBGR.

Structure's Qualitative Health & Serviceability Condition Score (0-100): < 50

Qualitative Estimate of Structure's Safe Remaining Life: < 15 years

Recommendations

1. Clean the debris and mud collected in the culvert chambers to facilitate flow of water. Fortify the banks at inlet and outlet to prevent erosion of mud in the creek.
2. Replace the guardrail with a standard MBGR system

Urgency of Maintenance Needs

The work on the recommended item No. 2 should be scheduled for the next five years. Item I may be scheduled by the maintenance forces.

Approximate Cost of Rehabilitation or Repairs : $25,000

FIELD OBSERVATION NOTES

Observation Date and Time: 4-28-20, 4:40 p.m. Caltrans District: 4 County: Marin

Facility Carried: E. Blithedale Ave Feature Intersected: Sutter Manor Creek Bridge ☐ Culvert ☒

Mill Valley Crossing No: 105 Caltrans Bridge No: _____ Year Built: _____

Total Width: __ Total Length: 55' No. of Spans (Bridge): __ No. of Chambers (Culvert): 2

Site Coordinates (Apple iPhone): 37° 54' 12" N & 122° 31' 26" W Weather: Sunny & Clear

Street Posted for: Truck Weight Limit ☐ Speed Limit ☐ Nearest Postal Address: 745 E. Blithedale

SUPERSTRUCTURE AND TOPSIDE COMPONENTS	DESCRIPTION	CONDITION REMARKS
Superstructure Basics	• Structure Type & Materials: Double CMPs • Alignment: Curved ☐ Tangent ☒ • Superstructure Depth: • Span Lengths: • Waterway Opening Height: 6'± • Skew at Abutments: 40° • Curb-to-Curb Width: 18' • Expansion Joints: n/a • Culvert ϕ or Dimensions: 2 X 6'-0"	CMP: Corrugated Metal Pipe. Culverts support a road and a 20'-wide earth and planted space on top. Culvert chambers are partially filled with mud.
Railings, Sidewalks & Curbs	• Railing Type: MBGR Left: ☒ Right: ☒ • Railing Height: Left: 29" Right: 29" • Sidewalks on __side(s) • Width of Sidewalk: Left: Right: • Curb Height: 6" • Median Barrier: Yes ☒ No: ☐	Road protected by guardrail on one side and 6" curb next to the 20' green area
Deck Surface	• AC ☒ Concrete ☐ Wood ☐	AC is in good condition
Span Hinges	• None ☐	n/a
Restrainers	At: Abutments ☐ Bents ☐ None ☐	n/a
Soffit Opening Locations	• None ☐	n/a
Traffic Lanes on Bridge	• No. of Traffic Lanes: 1 • Width of Median: 20' • Width of Shoulder, Left: Right:	One-way driveway to shopping center
Approaches	• Approach Slab at: BB ☐ EB ☐ None ☒ • No. of Traffic Lanes: 1 • Width of Median: None • Width of Shoulder: Left: Right: • Width of Sidewalk: Left: Right: • Railing Type: None Left: Right: • Railing Height: Left: Right:	

SUBSTRUCTURE AND UNDERSIDE COMPONENTS	DESCRIPTION	CONDITION REMARKS
Abutments Types & Wingwalls	• Abutment Types: • Integral wingwalls ☐ and/ or Headwalls: ☐	n/a
Bent	• Materials: • Number of bents: • Pier Wall Type ☐ Column Type ☐ • X-sectional Dimensions: Rec • Skew at Bents:	n/a
Piling	• Not Visible ☐ Pile Type: • Pile Extension:	n/a
Abutment and/or Bent Footings	• Footings: Visible ☐ Not Visible ☐ • Invert slab: Yes ☐ No ☐	n/a
Embankment Condition and Erosion Control Measures	Limited rock Slope protection & vegetation	
Road Under the Bridge	• None ☐ • No. of Traffic Lanes: • Width of Median: • Width of Shoulder: Left: Right • Width of Sidewalk: Left: Right	n/a

MISCELLANEOUS FEATURES	DESCRIPTION	REMARKS
Evidence of Previous Work	☐ Seismic Retrofit ☐ Rehab & Repairs	
Visible Utilities	• Gas ☐ Water ☐ Sewer ☐ • Electrical ☐ Telecommunication ☐ • Other Utilities: • Structure Lighting: • Manhole on Deck:	
Availability of Detours	Detour possible	
Drainage Facilities on Structure	• None ☒	
Drainage Facilities Under Structure	None	
Existing Facilities at Structure	• Retaining Walls: None ☐ Integral ☐ Near Abuts ☐	
Visual Hydraulic Assessment – Fish Passage	Flow present ☒ Fish Spawning Route ☐	



Photo 3 – Culverts outlet view



Photo 4 – View of mud-filled culvert inlet, looking West



Photo 5 – Creek view



Photo 6 – Full vew of guardrail

MILL VALLEY STRUCTURE NO. 106

STRUCTURE NO. 106 - LOMITA AVE BRIDGE OVER SUTTER MANOR CREEK



Photo 1 – Street level of Bridge Looking North



Photo 2 - Street Level Looking South

SUMMARY & RECOMMENDATIONS

The Bridge was visually inspected by Manouchehr Mahmoudzadeh, PE, on April 28, 2020.

The field notes and photos are recorded in the subsequent pages of this section.

General Observations

The structure is a cast-in-place, two-span reinforced concrete slab bridge, and likely over 50 years old. It is constructed like a box culvert with an invert and likely no foundations. There are cracks and spalls at multiple locations all over the deck and substructure, and rusty rebar is exposed. There is evidence of erosion scour present.

The timber railing at the right edge of deck is substandard (30”) and there is no railing at the left edge, which is about 8’ away from the travelled way. The AC surfacing is in good condition.

Structure’s Qualitative Health & Serviceability Condition Score (0-100): < 50

Qualitative Estimate of Structure’s Safe Remaining Life: < 20 years

Recommendations

1. Clean bushes & branches on the top of deck near left edge of deck for a better assessment of the bridge.
2. Repair all spalls and cracked sections by removing & patching unsound concrete (on bridge deck, abutments and the pier wall to improve life and serviceability of the bridge.
3. Repair the railing and replace the missing parts to improve safety.

Urgency of Maintenance Needs

The work on the items 2 and 3 above should be programmed for the next five years. Item 1 may be performed by maintenance forces..

Approximate Cost of Rehabilitation or Repairs : $28,000

FIELD OBSERVATION NOTES

Observation Date and Time: 4-28-20, 11:00 a.m. Caltrans District: 4 County: Marin

Facility Carried: Lomita Ave Feature Intersected: Sutter Manor Creek Bridge [X] Culvert [ ]

Mill Valley Crossing No: 106 Caltrans Bridge No: _____ Year Built: _____

Total Width: 54' Total Length: 16' No. of Spans (Bridge): 2 No. of Chambers (Culvert): _____

Site Coordinates (Apple iPhone): 37° 54' 1" N & 122° 31' 34" W Weather: Sunny & Clear

Street Posted for: Truck Weight Limit [ ] Speed Limit [ ] Nearest Postal Address: 700 E. Blithedale

SUPERSTRUCTURE AND TOPSIDE COMPONENTS	DESCRIPTION	CONDITION REMARKS
Superstructure Basics	• Structure Type & Materials: 2-Span Slab Bridge • Alignment: Curved [ ] Tangent [X] • Superstructure Depth: 12" • Span Lengths: Vary from 7.5' to 12' each • Waterway Opening Height: 4'-8"± • Skew at Abutments: 0° • Curb-to-Curb Width: n/a' • Expansion Joints: n/a • Culvert ϕ or Dimensions: n/a	Concrete is deteriorating at various location of the bridge deck, substructure.
Railings, Sidewalks & Curbs	• Railing Type: Timber Left [ ] Right [x] • Railing Height: Left Right 30" • Sidewalks on 1 side(s) • Width of Sidewalk: Left: Right: 5' • Curb Height: 5" • Median Barrier: Yes [ ] No: [X]	Railing on one side only and has missing section. Edge of road on opposite side is 8' from drop-off, hence no railing
Deck Surface	• AC [X] Concrete [ ] Wood [ ]	AC is in good condition
Span Hinges	• None [X]	
Restrainers	At: Abutments [ ] Bents [ ] None [X]	
Soffit Opening Locations	• None [X]	
Traffic Lanes on Bridge	• No. of Traffic Lanes: 2 • Width of Median: • Width of Shoulder, Left: Right:	
Approaches	• Approach Slab at: BB [ ] EB [ ] None [X] • No. of Traffic Lanes: 2 • Width of Median: None • Width of Shoulder: Left: Right: • Width of Sidewalk: Left: Right: • Railing Type: None Left: Right: • Railing Height: Left: Right:	

SUBSTRUCTURE AND UNDERSIDE COMPONENTS	DESCRIPTION	CONDITION REMARKS
Abutments Types & Wingwalls	• Abutment Types: Concrete • Integral wingwalls [X] and/ or Headwalls: [ ]	Severely Cracked
Bent	• Materials: • Number of bents: • Pier Wall Type [X] Column Type [ ] • X-sectional Dimensions: Rec 6”x(24”-48”) • Skew at Bents:	Pier wall depth varies (North to South) and is severely cracked
Piling	• Not Visible [X] Pile Type: • Pile Extension:	Likely no piles
Abutment and/or Bent Footings	• Footings: Visible [ ] Not Visible [X] • Invert slab: Yes [X] No [ ]	Built like a box culvert with no footings
Embankment Condition and Erosion Control Measures	Combination of Sandbags & Rock Slope protection	
Road Under the Bridge	• None [X] • No. of Traffic Lanes: • Width of Median: • Width of Shoulder: Left: Right • Width of Sidewalk: Left: Right	

MISCELLANEOUS FEATURES	DESCRIPTION	REMARKS
Evidence of Previous Work	[ ] Seismic Retrofit [ ] Rehab & Repairs	
Visible Utilities	• Gas [ ] Water [ ] Sewer [ ] • Electrical [ ] Telecommunication [ ] • Other Utilities: • Structure Lighting: • Manhole on Deck:	
Availability of Detours	Detour possible	
Drainage Facilities on Structure	• None [ ] • Several deck drains	
Drainage Facilities Under Structure	None	
Existing Facilities at Structure	• Retaining Walls: None [ ] Integral [ ] Near Abuts [X]	Adjacent commercial Building
Visual Hydraulic Assessment – Fish Passage	Flow present [X] Fish Spawning Route [ ]	



Photo 3 – View of bridge looking east



Photo 4 – View of bridge looking west



Photo 5 – View of abutment and cracked section



Photo 6 – View of pier wall and deteriorated section



Photo 7 – View of abutment & evidence of scour



Photo 8 – View of cement bag slope protection



Photo 9 – View of cement bag and rock slope protection



Photo 10 – View of cement bag and railing at right edge of deck

MILL VALLEY STRUCTURE NO. 107

STRUCTURE NO. 107 - E. BLITHEDALE AVE CULVERT AT SUTTER MANOR CREEK



Photo 1 – View of Culvert Outlet Looking North



Photo 2 – Street Level View

SUMMARY & RECOMMENDATIONS

The site was visually inspected by Manouchehr Mahmoudzadeh, PE, on April 1, 2020.

The field notes and photos are recorded in the subsequent pages of this section.

General Observations

The RCP culvert, is likely over 30 years old and in good condition. There are concrete headwall and short wingwalls at north (inlet) end and concrete sacks at the south (inlet) end of the culvert. There is another 12" concrete storm drain pipe draining in the creek 90 degrees West. There are bushes and branches of trees partially blocking the culvert's inlet.

Structure's Qualitative Health & Serviceability Condition Score (0-100): < 60

Qualitative Estimate of Structure's Safe Remaining Life: < 40 years

Recommendations

1. Clean debris and install steel debris rack at the culvert headwall to keep floating vegetation out of the culvert and facilitate flow of water in the creek.

Urgency of Maintenance Needs

The work on the recommended action should be done as part of routine maintenance.

Approximate Cost of Rehabilitation or Repairs : None

FIELD OBSERVATION NOTES

Observation Date and Time: 4-28-20, 11:20 a.m. Caltrans District: 4 County: Marin

Facility Carried: E. Blithedale Ave Feature Intersected: Sutter Manor Creek Bridge ☐ Culvert ☒

Mill Valley Crossing No: 107 Caltrans Bridge No: _____ Year Built: _____

Total Width: ___ Total Length: 70' No. of Spans (Bridge): ___ No. of Chambers (Culvert): 1

Site Coordinates (Apple iPhone): 37° 51' 3" N & 122° 31' 36" W Weather: Sunny & Clear

Street Posted for: Truck Weight Limit ☐ Speed Limit ☒ Nearest Postal Address Lomita Ave

SUPERSTRUCTURE AND TOPSIDE COMPONENTS	DESCRIPTION	CONDITION REMARKS
Superstructure Basics	• Structure Type & Materials: RCP Culvert • Alignment: Curved ☐ Tangent ☒ • Superstructure Depth: 30" • Span Lengths: • Waterway Opening Height: • Skew at Abutments: 0° • Curb-to-Curb Width: n/a • Expansion Joints: n/a • Culvert ϕ or Dimensions: 2'-6"	RCP: Reinforced Concrete Pipe
Railings, Sidewalks & Curbs	• Railing Type: Timber Left: Right: • Railing Height: Left: Right: • Sidewalks on ____ side(s) • Width of Sidewalk: Left: Right: • Curb Height: 8" (culvert parapet) • Median Barrier: Yes ☐ No: ☒	There are no railings at street level protecting from fall at this culvert crossing
Deck Surface	• AC ☒ Concrete ☐ Wood ☐	AC surfacing is in good condition
Span Hinges	• None ☒	
Restrainers	At: Abutments ☐ Bents ☐ None ☒	
Soffit Opening Locations	• None ☒	
Traffic Lanes on Bridge	No. of Traffic Lanes: 2 lanes in each direction • Width of Median: • Width of Shoulder, Left: 5' Right: 5'	
Approaches	• Approach Slab at: BB ☐ EB ☐ None ☐ • No. of Traffic Lanes: n/a • Width of Median: None • Width of Shoulder: Left: Right: • Width of Sidewalk: Left: Right: • Railing Type: None Left ☐ Right ☐ • Railing Height: Left: Right:	

SUBSTRUCTURE AND UNDERSIDE COMPONENTS	DESCRIPTION	CONDITION REMARKS
Abutments Types & Wingwalls	• Abutment Types: Conc • Integral wingwalls ☐ and/ or Headwalls: ☒	Concrete Headwall at N. end and concrete sacks at S. end
Bent	• Materials: • Number of bents: • Pier Wall Type ☐ Column Type ☐ • X-sectional Dimensions: • Skew at Bents:	n/a
Piling	• Not Visible ☐ Pile Type: • Pile Extension:	n/a
Abutment and/or Bent Footings	• Footings: Visible ☐ Not Visible ☐ • Invert slab: Yes ☐ No ☐	n/a
Embankment Condition and Erosion Control Measures	Natural ground covered with vegetation south end, concrete channel lining at north end.	
Road Under the Bridge	• None ☐ • No. of Traffic Lanes: • Width of Median: • Width of Shoulder: Left: Right • Width of Sidewalk: Left: Right	n/a

MISCELLANEOUS FEATURES	DESCRIPTION	REMARKS
Evidence of Previous Work	☐ Seismic Retrofit ☐ Rehab & Repairs	
Visible Utilities	• Gas ☐ Water ☐ Sewer ☐ • Electrical ☒ Telecommunication ☒ • Other Utilities: • Structure Lighting: • Manhole on Deck:	There is a raised access hole to pump out excess water.
Availability of Detours	Detour possible	
Drainage Facilities on Structure	• None ☒ •	
Drainage Facilities Under Structure	None	A 12” storm drain under Lomita Ave enters the creek at 90° angle
Existing Facilities at Structure	• Retaining Walls: None ☐ Integral ☐ Near Abuts ☐	
Visual Hydraulic Assessment – Fish Passage	Flow present ☒ Fish Spawning Route ☐	



Photo 3 – View of culvert outlet



Photo 4 – View of vegetation at culvert inlet headwall



Photo 5 – View of inlet headwall and wingwall



Photo 6 – View of vegetation upstream in the creek

MILL VALLEY STRUCTURE NO. 108

STRUCTURE NO. 108- PEDESTRIAN BRIDGE OVER BOTHIN BAY (THE BAYFRONT BRIDGE)



Photo 1 - Deck Level Looking West



Photo 2 - Deck Level Looking East

SUMMARY & RECOMMENDATIONS

The bridge was visually inspected by Manouchehr Mahmoudzadeh, PE, on April 28, 2020, as well as multiple other times.

The field notes and photos are recorded in the subsequent pages of this section.

General Observations

The bridge, aa eight-span all-timber pedestrian crossing structure, has a date mark on its deck stating 2007 Mill Valley Parks, but appears older. It is supported on timber piles and pile extension bents, each having two supports. Several pile extensions experienced distress and flaws, resulting in temporary bridge closure in 2019 and repairs, The bridge was opened earlier in early 2020. The deck planks and parts of the substructure are also cracked; some are in relatively fair and some are in less ideal condition. There is 2- ton bridge weight limit sign at both ends of the bridge.

The timber railing on this bridge has a substandard height of 36".failing to meet rail safety requirement and cracked in several places.

Structure's Qualitative Health & Serviceability Condition Score (0-100): < 70

Qualitative Estimate of Structure's Safe Remaining Life: < 30 years

Recommendations

1. Repair / replace cracked pieces of railing, deck planks, cap beams and retaining walls.
2. Seal the deck planks and railing to improve service life.
3. Inform the utility companies the pipe casings under the bridge deck that are severely corroded.

Urgency of Maintenance Needs

The work on the major repairs to the bridge should be scheduled for the next five years.

Approximate Cost of Rehabilitation or Repairs : $14,000

FIELD OBSERVATION NOTES

Observation Date and Time: 4-28-20, 9:45 a.m. Caltrans District: 4 County: Marin

Facility Carried: Park Trail Pedestrian Feature Intersected: Bothin Bay Bridge [X] Culvert [ ]

Mill Valley Crossing No: 108 Caltrans Bridge No: _____ Year Built: _____

Total Width: 11'-6"± (deck) Total Length: 170' No. of Spans (Bridge): 8 No. of Chambers (Culvert): _

Site Coordinates (Apple iPhone): 37° 53' 49" N & 122° 31' 31" W Weather: Sunny & Clear

Street Posted for: Truck Weight Limit [X] Speed Limit [ ] Nearest Postal Address in Bothin Bay

SUPERSTRUCTURE AND TOPSIDE COMPONENTS	DESCRIPTION	CONDITION REMARKS
Superstructure Basics	• Structure Type & Materials: Timber Bridge • Alignment: Curved [ ] Tangent [X] • Superstructure Depth: 15" • Span Lengths: 10', 6 x 25', and 10' • Waterway Opening Height: 9' • Skew at Abutments: 0° • Curb-to-Curb Width: 10'-6½"± • Expansion Joints: n/a • Culvert ϕ or Dimensions: n/a	12"x4" Beams, 10"x10" Cap Beams & 10"x4" intermediate Diaphragms Structure overall is in fair condition
Railings, Sidewalks & Curbs	• Railing Type: Timber Left [x] Right [x] • Railing Height: Left 42" Right 42" • Sidewalks on ____ side(s) • Width of Sidewalk: Left: Right: • Curb Height: 8" (culvert parapet) • Median Barrier: Yes [ ] No: [X]	Several pieces of railing have been replaced recently.
Deck Surface	• AC [ ] Concrete [ ] Wood [X]	Wood Planks are in fair to poor condition
Span Hinges	• None [X]	
Restrainers	At: Abutments [ ] Bents [ ] None [X]	
Soffit Opening Locations	• None [X]	
Traffic Lanes on Bridge	• No. of Traffic Lanes: Pedestrian walkway • Width of Median: • Width of Shoulder, Left: Right:	
Approaches	• Approach Slab at: BB [x] EB [x] None [ ] • No. of Traffic Lanes: n/a • Width of Median: None • Width of Shoulder: Left: Right: • Width of Sidewalk: Left: Right: • Railing Type: None Left Right • Railing Height: Left: Right:	AC surfacing on both approaches to bridge are in good condition.

SUBSTRUCTURE AND UNDERSIDE COMPONENTS	DESCRIPTION	CONDITION REMARKS
Abutments Types & Wingwalls	• Abutment Types: Wood • Integral wingwalls [x] and/ or Headwalls: [ ]	Short wingwall / retaining walls
Bent	• Materials: • Number of bents: 6 • Pier Wall Type [ ] Column Type [X] • X-sectional Dimensions: 12” Round pile • Skew at Bents:	
Piling	• Not Visible [X] Pile Type: • Pile Extension: X	Middle 4 sets of pile extensions are wrapped with polyvinyl jackets materials and grouted
Abutment and/or Bent Footings	• Footings: Visible [ ] Not Visible [ ] • Invert slab: Yes [ ] No [X]	Footings n/a
Embankment Condition and Erosion Control Measures	Natural / Original ground, relatively flat.	
Road Under the Bridge	• None [X] • No. of Traffic Lanes: • Width of Median: • Width of Shoulder: Left: Right • Width of Sidewalk: Left: Right	

MISCELLANEOUS FEATURES	DESCRIPTION	REMARKS
Evidence of Previous Work	[ ] Seismic Retrofit [ ] Rehab & Repairs	Replaced pieces of deck planks and railing members, jacketed pile extensions.
Visible Utilities	• Gas [ ] Water [X] Sewer [X] • Electrical [X] Telecommunication [ ] • Other Utilities: • Structure Lighting: • Manhole on Deck:	There pipes in 3” casings (corroded)
Availability of Detours	None over the water	
Drainage Facilities on Structure	• None [X] •	
Drainage Facilities Under Structure	None	
Existing Facilities at Structure	• Retaining Walls: None [ ] Integral [ ] Near Abuts [X]	Timber retaining walls
Visual Hydraulic Assessment – Fish Passage	Flow present [X] Fish Spawning Route [X]	



Photo 3 – View of bridge weight limit sign at west end



Photo 4 – View of bridge signage at the east end



Photo 5 – View of substructure and pile extensions



Phot **Photo 6 – Profile view of bridge**



Photo 7 – View of one abut and railing



Photo 8 – View of railing & timber condition



Photo 9 – View of replaced railing parts



Photo 10 – View of west abutment



Photo 11 – View of utility lines under the bridge



Photo 12 – View of Bent 7 and cap beam

Thank you,

Faryal Saiidnia
Project Manager

City of Mill Valley
Public Works Department
26 Corte Madera Avenue
Mill Valley, CA 94941
fsaiidnia@cityofmillvalley.org
415.384.4830

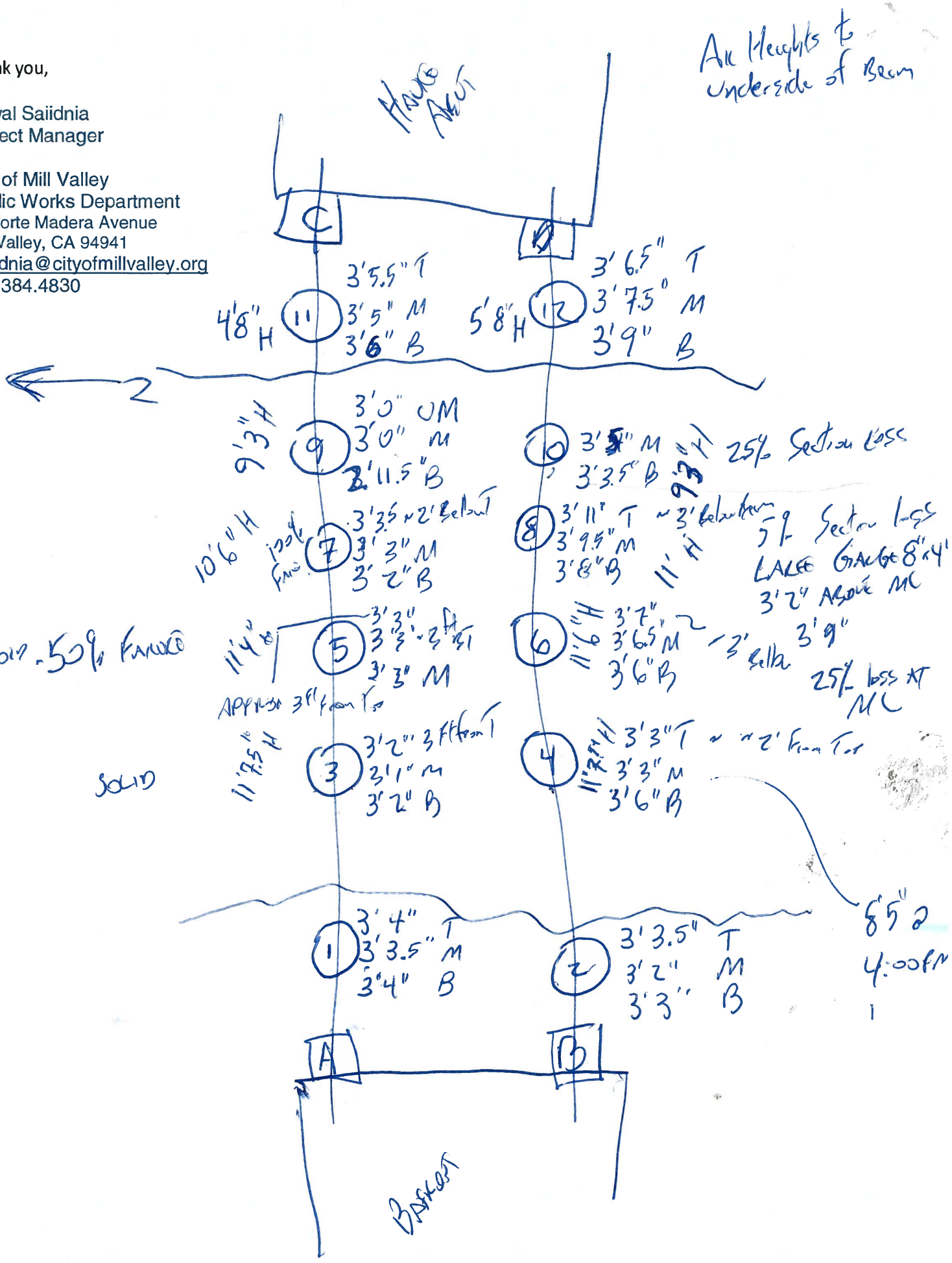

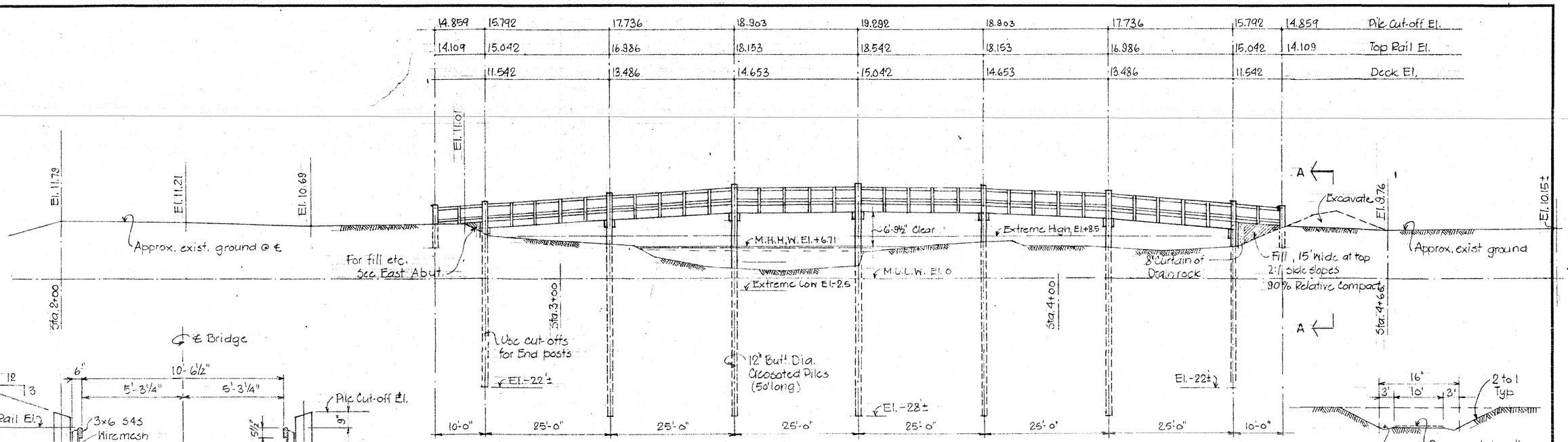

ELEVATION OF BRIDGE

1" = 10'

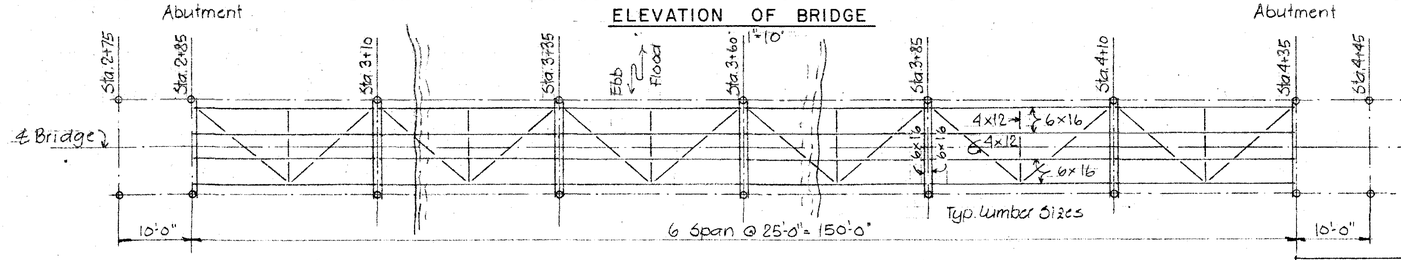

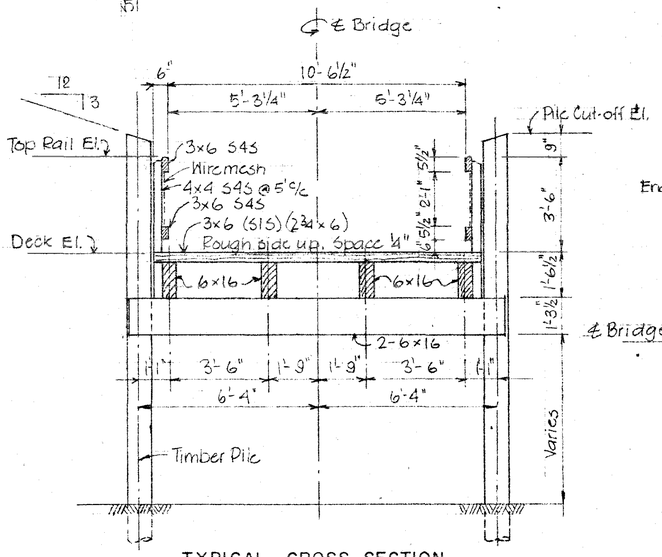

TYPICAL CROSS SECTION

⅜" = 1'-0"

NOTES: See alternate handrail and section on Drwg 02

GENERAL NOTES

1. Elevations shown on these drawings refer to M.L.L.W. Datum.
2. The bridge shall be staked in the field by the Engineer.
3. The bridge has been designed for a uniform Live Load of 85 lbs per Sq. Ft. and an occasional overload of 100 lbs per Sq. Ft. for which a 1.5 Overstress factor is permitted.
4. The bridge has been designed in accordance with the applicable provisions of the following codes and Specifications
   a) Standard Specifications for Highway Bridges AASHO, 1969 Edition
   b) Uniform Building Code, 1973 Edition.
   c) Timber Construction Manual, 1966 Edition.
   d) Specifications for the Pressure Treatment of Western Woods, W.W.P.O.A. & AWPA.
   e) Standard Specifications by State of California, Department of Public Works, Jan. 1973.

SPECIFIC CONDITIONS

1. PAYMENT shall be lump sum which shall be full compensation for furnishing all labor, materials, incl. hardware, furnishing and applying sealer and wood preservatives, tools equipment and incidentals, and for all work as needed to construct the bridge as shown as specified.
   AN ADD - OR DEDUCT PRICE shall be bid for constructing the ALTERNATE HANDRAIL instead of the wire-mesh type handrail shown.
2. WORKMANSHIP shall be in accordance with Sect. 57-3.02A of the Standard Specifications (Ref. 4c)
3. UTILITIES. The Contractor shall cooperate with Utility Companies, but the County shall not be held responsible for delays caused by the utility installation. Pacific Tel. Co. plans to install a 4"ϕ plastic conduit as shown on Drawing No. 02.
4. EARTHWORK shall be as shown and directed by the Engineer. Local material may be used as fill Drain rock shall be ¾" size.
5. TIMBER PILES shall be Douglas Fir, Coast Region, 50 Ft. long, 12" Min. butt (3' from butt), conforming to ASTM D25 except as noted. Piles shall be treated in accordance with AWPA Specifications C1 & C3 for exposed piles in coastal waters, Creosote-coal tar solution, 20 lb/CF retention in outer 2".

PLAN OF BRIDGE – FRAMING PLAN

1" = 10'

The design load to one pile is 10T and less, Piles shall be driven to the elevations shown or refusal, whichever comes first.

6. LUMBER
   a. All lumber for Stringers and Bent Beams shall be DF-Larch, Select Structural Grade or better. (S4S) (F.O.H.C.)
   b. All lumber for Diaphragms, Blocking & Bracing shall be DF-Larch, Dense No. 1 or better. (S4S)
   c. All Deck Planks shall be DF-Larch No. 1 (S1S) (2¾" x 6"±)
   d. All lumber in Railposts and Rails (in Alternate Handrail also) shall be California Redwood No. 1 (S4S)
   e. All lumber for Abutment Planks shall be California Redwood No. 1 or better. (Rough)
7. PRESERVATIVE TREATMENT
   a. Lumber specified under 6.a, b & c. above shall be pressure treated with Chemonite in accordance with AWPA C1 & C2. 0.5 lb/CF retention.
   b. Lumber specified under 6.d. above, shall be given one ample coat of a clear sealer (Thomson or approved equal)
8. FASTENERS & MISC. METAL
   a. All nails, bolts, nuts and washers, and fabricated connectors, and the wiremesh for the rail, shall be hot dip galvanized after fabrication.
   b. Spikes for fastening of bridge planks shall be "Double-Grip Bridge Spikes" as manufactured by Timber Fasteners, Inc, or approved equal.

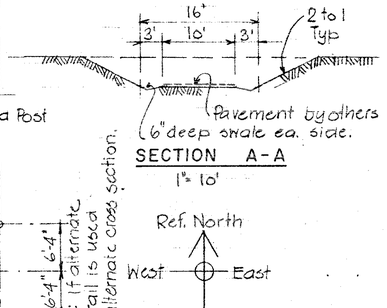

SECTION A-A

1" = 10'

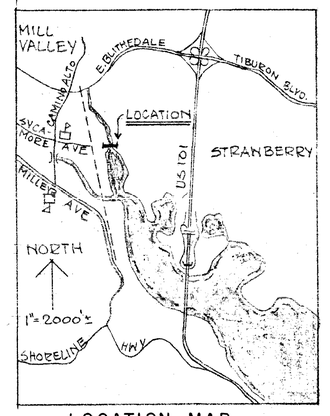

LOCATION MAP

000394

Various Scales As Noted or NTS

Graphic Scale

A COOPERATIVE PROJECT BY
THE CITY OF MILL VALLEY AND THE COUNTY OF MARIN

BALA & STRANDGAARD CIVIL & STRUCTURAL ENGINEERS CALIFORNIA		BICYCLE & PEDESTRIAN BRIDGE SYCAMORE AVE. MILL VALLEY PLAN & ELEVATION	
BY: J.S	APPROVED BY:	SCALE: As Noted	DRAWING NO. 7341 - 01
CHKD.:	DATE: 1 MAY 10-74	SHEET — OF —	REV.

REV.	DATE	BY	DESCRIPTION

PRINTED ON DIEPO No. 1000H-S CLEARPRINT FADE-OUT 8-72

PLAN

ELEVATION OF HANDRAIL
INSIDE VIEW
3/8" = 1'-0"

PLAN H-H
3/4" = 1'-0"

ELEVATION OF ALTERNATE HANDRAIL
OUTSIDE VIEW
3/8" = 1'-0"

PLAN J-J
3/4" = 1'-0" (N.T.S.)

PLAN — FRAMING DETAILS
3/8" = 1'-0"

SECTION B - B
3/4" = 1'-0"

SECTION C - C
3/4" = 1'-0"

SECTION D-D
3/4" = 1'-0"

SECTION E-E
3/4" = 1'-0"

CROSS SECTION
3/4" = 1'-0"

ALTERNATE CROSS SECTION

HALF ABUTMENT-ELEVATION F-F
3/8" = 1'-0"

DAP DETAIL

SECTION G-G
3/8" = 1'-0"

CONNECTOR PLATE
3/4" = 1'-0"

NOTES:
1. Drill 1"ϕ holes for 7/8"ϕ bolts.
2. Galvanize after fabrication
3. 24 Reqd.

Note: All bolts are ½"ϕ M. bolts.

Note: All bolts : ½"ϕ Bolts

000395

Various Scales As Noted or NTS
Graphic Scale

BALA & STRANDGAARD
CIVIL & STRUCTURAL ENGINEERS
CALIFORNIA

BICYCLE & PEDESTRIAN BRIDGE
SYCAMORE AVE. MILL VALLEY
RAIL AND OTHER DETAILS

REV.	DATE	BY	DESCRIPTION

BY: JS
CHKD.:
APPROVED BY:
DATE: MAY 10 '74
SCALE: As Noted
SHEET ___ OF ___
DRAWING NO. 7341 - 02
REV.

PRINTED ON DIEPO NO. 1000H-6 CLEARPRINT FADE-OUT 8-72

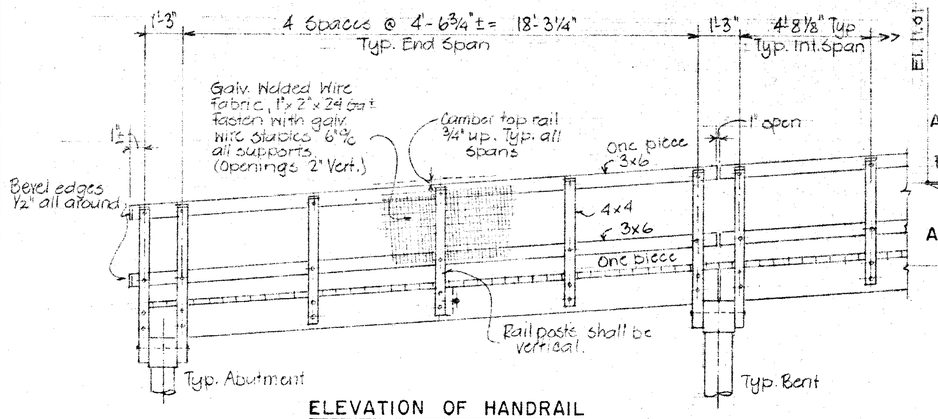

ELEVATION OF HANDRAIL

Scale ⅜"=1'-0"

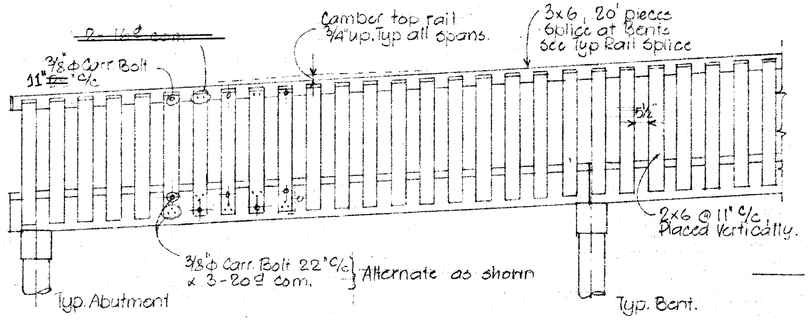

ELEVATION OF ALTERNATE HANDRAIL

Scale ⅜"=1'-0"

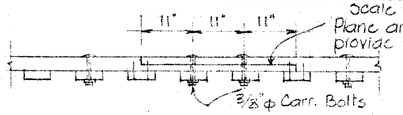

PLAN - RAIL SPLICE DETAIL

Note: Alternate Rail only.

Scale ¾"=1'-0"

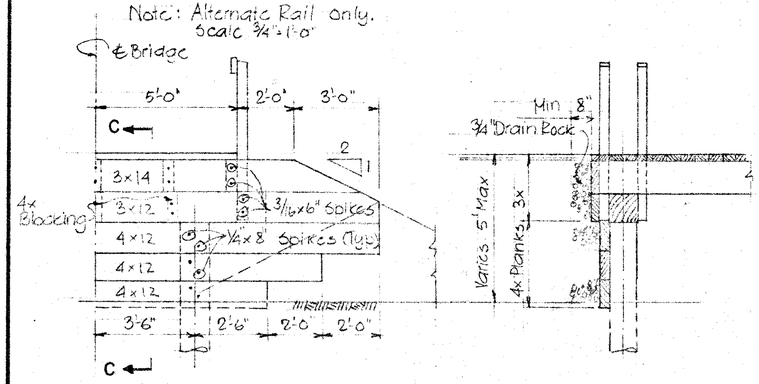

HALF ABUTMENT ELEVATION

Scale ⅜"=1'-0"

SECTION C-C

Scale ⅜"=1'-0"

NOTE: With Alternate Handrail provide blocking as needed to substitute for rail posts.

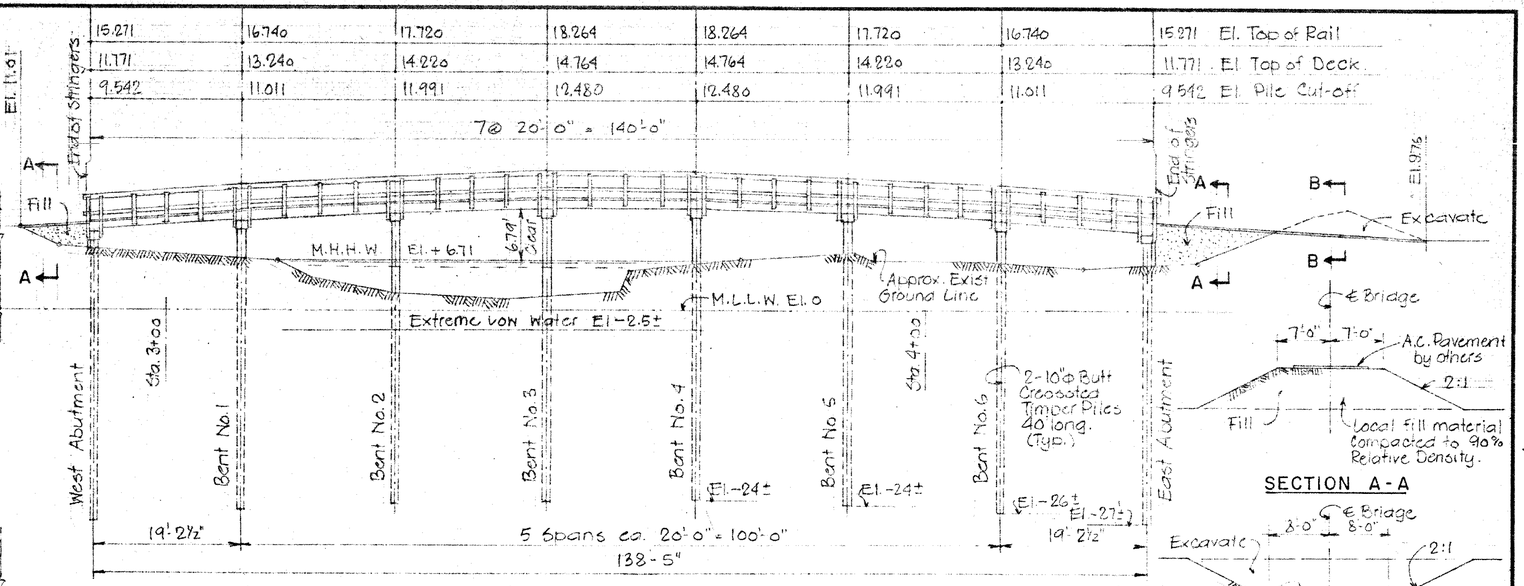

ELEVATION OF BRIDGE

Scale 1"=10'

SECTION A-A

SECTION B-B

Scale 1"=10'

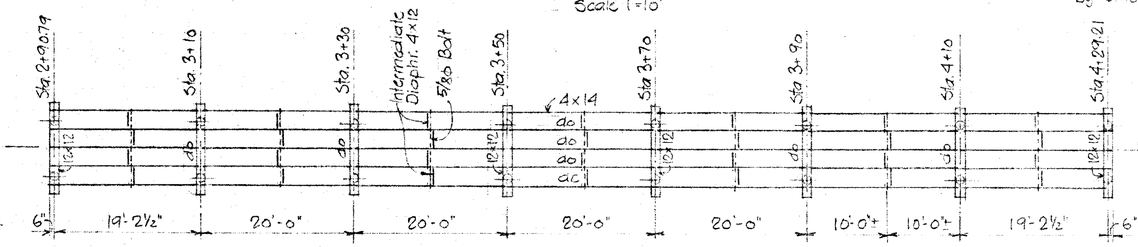

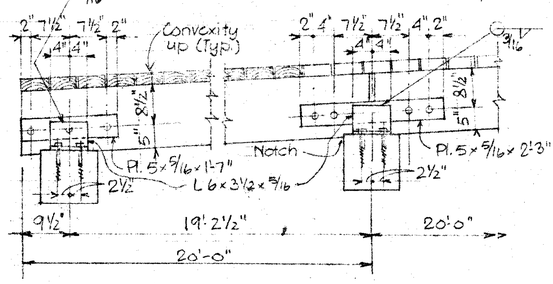

LONGITUDINAL SECTION

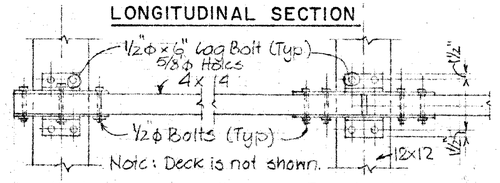

PLAN - CONNECTIONS

Scale ¾"=1'-0"

NOTES.

1. Beams shall be notched as required to provide level bearing on pier caps
2. Two pre-fabricated seat angles shall be used at each stringer at each support except at the two exterior stringers where only one shall be used.

FRAMING PLAN

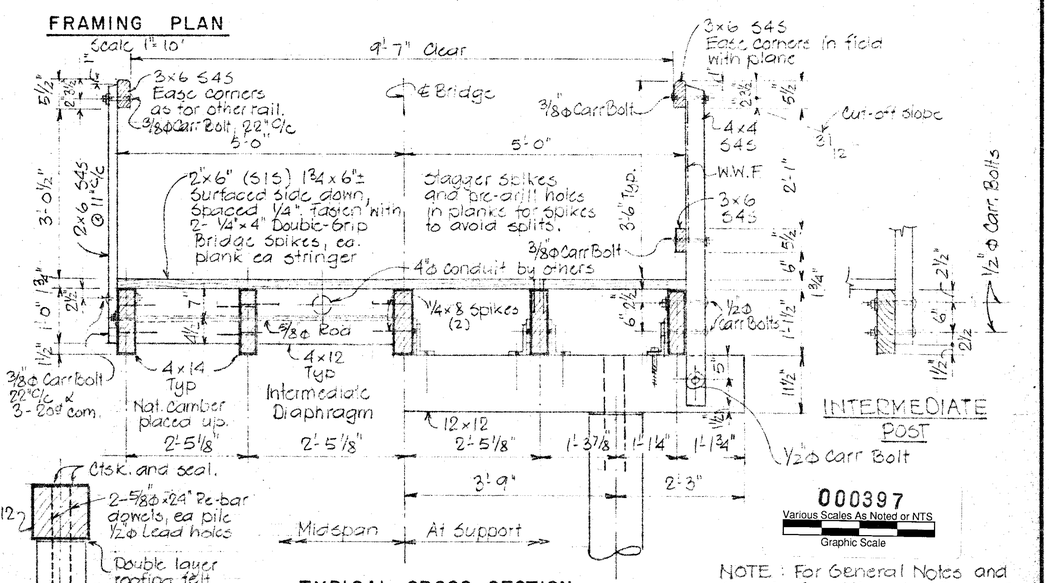

TYPICAL CROSS SECTION

Scale ¾"=1'-0"

PILE CAP CONNECTION

Scale ¾"=1'-0"

000397

Various Scales As Noted or NTS

Graphic Scale

NOTE: For General Notes and Specific Conditions, see Dring 03

REV.	DATE	BY	DESCRIPTION

BALA & STRANDGAARD
CIVIL & STRUCTURAL ENGINEERS
CALIFORNIA

BY: J.S.
CHKD.:
APPROVED BY: B Strandgaard
DATE: July 18, 1974

BICYCLE & PEDESTRIAN BRIDGE
SYCAMORE AVE. MILL VALLEY
ELEVATION & DETAILS

SCALE: As Noted
SHEET 1 OF 1
DRAWING NO. 7341-04
REV.

PRINTED ON DIEPO NO. 1000H-S CLEARPRINT FADE-OUT 5-72

MILL VALLEY STRUCTURE NO. 109

STRUCTURE NO. 109 - MILLER AVE PEDESTRIAN BRIDGE OVER TRIBUTRARY TO ARROYO CORTE MADERA DEL PRESIDIO



Photo 1 - Street Level Looking East



Photo 2 - Street Level Looking West

SUMMARY & RECOMMENDATIONS

The Bridge was visually inspected by Manouchehr Mahmoudzadeh, PE, on April 1, 2020 and at several additional occasion by other CIC staff to evaluate the impact of the vehicular accident.

The field notes and photos are recorded in the subsequent pages of this section.

General Observations

The bridge is made of rusting-type (Corten) wide-flange and channel section steel beams with redwood decking and steel and wood railings on each side. The pedestrian bridge connects Miller Avenue and the Mill Valley-Sausalito Multiuse Path, across the road from Mill Valley High School near the City's southeast boundaries. It was shop-constructed and erected in 2016. The 7'-10" wide by 29'-2" long bridge spans over a wide and shallow V-ditch, running south to north and merging with the tidally controlled Arroyo Corte Madera Del Presidio.

The railings are comprised of eight steel HSS posts on each side, wood runners at three levels and rows of cables stretched between the posts.

An errant driver lost control on Miller Avenue, drove in the ditch and struck the bridge's southern edge near mid-span at high speed in early 2020. It bent the entire bridge northward, damaged the bearing elements at the abutments, dented and twisted an HSS post on the south edge, broke few railing timber runners and disengaged some, and did some damage to the deck in the impact area. Currently, the south railing has been yellow caution-taped as damaged. In addition, the hit has cause damage to concrete pads under the bearings at all 4 corners.

Structure's Qualitative Health & Serviceability Condition Score (0-100): < 50

Qualitative Estimate of Structure's Safe Remaining Life: < 10 years

Recommendations

The bridge has been inspected and a damage assessment report has been prepared. All damage illustrated above has been recommended for repair. Since the cost of repairs is almost as high as a new bridge, consider bridge replacement.

Urgency of Maintenance Needs

The work on the major repairs to the bridge should be top priority.

Approximate Cost of Rehabilitation or Repairs : $112,00

FIELD OBSERVATION NOTES

Observation Date and Time: 4-1-20, 2:45 p.m. Caltrans District: 4 County: Marin

Facility Carried: Pedestrian Feature Intersected: Trib, to Arroyo Corte Madera Bridge [X] Culvert [ ]

Mill Valley Crossing No: 109 Caltrans Bridge No: _____ Year Built: 2016

Total Width: 7'-9" Total Length: 29'-9" No. of Spans (Bridge): 1 No. of Chambers (Culvert): ____

Site Coordinates (Apple iPhone): 37° 53' 24" N & 122° 31' 31" W Weather: Sunny & Clear

Street Posted for: Truck Weight Limit [ ] Speed Limit [ ] Nearest Postal Address: MV High School

SUPERSTRUCTURE AND TOPSIDE COMPONENTS	DESCRIPTION	CONDITION REMARKS
Superstructure Basics	• Structure Type & Materials: Steel WF Frame and Wood Deck • Alignment: Curved [ ] Tangent [X] • Superstructure Depth: 14" • Span Lengths: 29' • Waterway Opening Height: 2'-3"± • Skew at Abutments: 0° • Curb-to-Curb Width: n/a • Expansion Joints: n/a • Culvert ϕ or Dimensions: n/a	Structure comprised of 3 main W14s & 8 transverse MC sections.
Railings, Sidewalks & Curbs	• Railing Type: Steel/Wood Left [x] Right [x] • Railing Height: 48" Left [X] Right [X] • Sidewalks on ____ side(s) • Width of Sidewalk: Left: Right: • Curb Height: 6" (on the approaches) • Median Barrier: Yes [ ] No: [X]	Railings are 6"x6"x¼" HSS posts with cable and wood elements. South edge side has struck hit by a vehicle and rendered unsafe.
Deck Surface	• AC [ ] Concrete [ ] Wood [X]	Redwood deck plank are ok
Span Hinges	• None [X]	
Restrainers	At: Abutments [ ] Bents [ ] None [X]	
Soffit Opening Locations	• None [X]	
Traffic Lanes on Bridge	• No. of Traffic Lanes: • Width of Median: • Width of Shoulder, Left: Right:	Strictly a ped bridge
Approaches	• Approach Slab at: BB [x] EB [x] None [ ] • No. of Traffic Lanes: n/a • Width of Median: None • Width of Shoulder: Left: Right: • Width of Sidewalk: Left: Right: • Railing Type: None Left [ ] Right [ ] • Railing Height: Left: Right:	48" & 29" long concrete approaches at BB & EB, respectively, and in excellent condition. 6" high concrete curbs at the edges

SUBSTRUCTURE AND UNDERSIDE COMPONENTS	DESCRIPTION	CONDITION REMARKS
Abutments Types & Wingwalls	• Abutment Types: Concrete seat • Integral wingwalls ☐ and/ or Headwalls: ☐	Curbs on each side
Bent	• Materials: • Number of bents: • Pier Wall Type ☐ Column Type ☐ • X-sectional Dimensions: • Skew at Bents:	n/a
Piling	• Not Visible ☐ Pile Type: • Pile Extension:	As-built plans show no piling
Abutment and/or Bent Footings	• Footings: Visible ☐ Not Visible ☒ • Invert slab: Yes ☐ No ☒	As-built plans show continuous 3’ wide x 1’-2” deep concrete footings @ each abutment
Embankment Condition and Erosion Control Measures	The waterway is a shallow V-ditch with natural ground, covered with vegetation and stable, as its bank and flow path.	
Road Under the Bridge	• None ☒ • No. of Traffic Lanes: • Width of Median: • Width of Shoulder: Left: Right • Width of Sidewalk: Left: Right	

MISCELLANEOUS FEATURES	DESCRIPTION	REMARKS
Evidence of Previous Work	☐ Seismic Retrofit ☐ Rehab & Repairs	Shop-assembled and erected in 2016
Visible Utilities	• Gas ☐ Water ☐ Sewer ☐ • Electrical ☐ Telecommunication ☐ • Other Utilities: • Structure Lighting: • Manhole on Deck:	
Availability of Detours	Foot detour is possible	
Drainage Facilities on Structure	• None ☒ •	
Drainage Facilities Under Structure	None	
Existing Facilities at Structure	• Retaining Walls: None ☒ Integral ☐ Near Abuts ☐	
Visual Hydraulic Assessment – Fish Passage	Flow present ☒ Fish Spawning Route ☐	



Photo 3 – View of bridge & damaged railing looking north



Photo 4 – Close up of damaged railing looking south



Photo 5 – 4-inch ± deflection of the south beam northward in the middle



Photo 6 – The bend in the middle main bridge beam



Photo 7 – Close-up of the damaged wood railing runners



Photo 8 – Close-up of the damaged HSS steel post, the point of impact



Photo 9 – Close up of NW bearing



Photo 10 – Close up of SW bearing



Photo 11 – Deck planks beam connection



Photo 12 – View of Joint between deck planks across the width at the car impact area

AS-BUILTS

ABBREVIATIONS

Ø	DIAMETER
AB	ANCHOR BOLT
ARCH	ARCHITECTURAL
BLDG	BUILDING
BOF	BOTTOM OF FOOTING
BOT	BOTTOM
CL	CENTER LINE
CJ	CONSTRUCTION JOINT
CLR	CLEAR
CONN	CONNECTION
CONT	CONTINUOUS
CTR	CENTER
DET	DETAIL
DWG	DRAWING
(E)	EXISTING
EA	EACH
EF	EACH FACE
EL OR ELEV	ELEVATION
ELECT	ELECTRICAL
EQ	EQUAL
EW	EACH WAY
FDN	FOUNDATION
FIN	FINISH
FL OR FLR	FLOOR
FOC	FACE OF CONCRETE
FS	FAR SIDE
FTG	FOOTING
GA	GAUGE
GALV	GALVANIZED
HORIZ	HORIZONTAL
HT	HEIGHT
JT	JOINT
LLH (LLV)	LONG LEG HORIZONTAL (VERTICAL)
LT WT	LIGHT WEIGHT
MAX	MAXIMUM
MECH	MECHANICAL
MFR	MANUFACTURER
MTL	METAL
MIN	MINIMUM
MISC	MISCELLANEOUS
(N)	NEW
NS	NEAR SIDE
NTS	NOT TO SCALE
NW	NORMAL WEIGHT
OC	ON CENTER
OPG	OPENING
OPP	OPPOSITE
PL	PLATE
REF	REFERENCE
REINF	REINFORCEMENT
REQ	REQUIRED
SAD	SEE ARCHITECTURAL DRAWINGS
SCD	SEE CIVIL DRAWINGS
SCHED	SCHEDULE
SECT	SECTION
SHT	SHEET
SIM	SIMILAR
SPEC	SPECIFICATION
SQ	SQUARE
STAGG'D	STAGGERED
STD	STANDARD
STL	STEEL
STRUCT	STRUCTURAL
SYMM	SYMMETRICAL
T&B	TOP AND BOTTOM
THRD'D	THREADED
TOC	TOP OF CONCRETE
TOF	TOP OF FOOTING
TOS	TOP OF STEEL
TOW	TOP OF WALL
TYP	TYPICAL
UON	UNLESS OTHERWISE NOTED
VERT	VERTICAL
W/	WITH
W/O	WITHOUT
WT	WEIGHT

SPECIAL INSPECTION:

SPECIAL INSPECTIONS SHALL BE DONE BY SPECIAL INSPECTORS THAT ARE QUALIFIED AND APPROVED FOR EACH AREA OF WORK STATED BELOW OR AS REQUIRED BY THE BUILDING OFFICIAL. ALL SPECIAL INSPECTIONS SHALL BE PAID FOR BY THE OWNER. THE SPECIAL INSPECTOR SHALL OBSERVE THE WORK ASSIGNED FOR CONFORMANCE WITH THE APPROVED DESIGN DRAWINGS AND SPECIFICATIONS. THE SPECIAL INSPECTOR SHALL SUBMIT REPORTS TO THE OWNER, THE BUILDING OFFICIAL, THE CONTRACTOR, ARCHITECT, AND STRUCTURAL ENGINEER. THE SPECIAL INSPECTORS SHALL CONFORM TO AND FULFILL ALL OTHER RESPONSIBILITIES AS OUTLINED IN SECTION 1704 OF THE CBC 2010. THE SPECIAL INSPECTOR SHALL SUBMIT WRITTEN REPORTS OF OBSERVATIONS STATING TIME, DATE, LOCATION OF WORK AND OBSERVATION OF WORK BEING DONE.

SPECIAL INSPECTIONS ARE REQUIRED FOR THE FOLLOWING WORK:

1. CONCRETE AND REINFORCING PLACEMENT.

7. BOLTS INSTALLED IN CONCRETE WHERE INDICATED ON DRAWINGS.

SPECIAL INSPECTION SHALL BE PROVIDED PER CBC SECTION 1704 FOR THE FOLLOWING:

8. INSTALLATION OF ALL EMBEDDED ANCHORS AND EPOXY DOWELS.

CONTRACTOR SUBMITTALS:

1. PROVIDE SHOP DRAWINGS FOR ALL REINFORCING STEEL, SHOWING BENDING, PLACEMENT DETAILS, SIZE AND LOCATION.
2. PROVIDE CERTIFIED COPIES OF ALL CONCRETE MIX DESIGNS INCLUDING COMPRESSIVE STRENGTH TEST REPORTS NO LESS THAN ONE WEEK PRIOR TO INSTALLATION OF ANY CONCRETE.

TESTING:

1. OWNER'S TESTING AGENCY SHALL PERFORM THE FOLLOWING TESTS AND SUBMIT APPROPRIATE REPORTS TO THE ARCHITECT, JURISDICTION AND OWNER.
2. PERFORM CONCRETE TESTING FOR CONCRETE IN ACCORDANCE WITH ACI 318. A. MAKE AND CURE THREE SPECIMEN CYLINDERS ACCORDING TO ASTM C31 FOR EACH 150 CUBIC YARDS OF CONCRETE POURED AT SITE EACH DAY. B. RETAIN ONE CYLINDER FOR SEVEN-DAY TEST AND TWO FOR THE 28-DAY TEST. TEST FOR SPECIFIED STRENGTH ACCORDING TO ASTM C39.
3. SUBMIT COMPLETE RECORD OF INSPECTION OF WORK FOR INSTALLATION OF EPOXY ANCHORS AND DOWELS.

5. TERMINATION OF REINFORCEMENT

A. TERMINATE ALL BARS IN LAPS, 90 DEGREE BENDS, OR WITH DOWELS INTO EXISTING CONCRETE.

B. BEND BOTTOM FOOTING BARS UP WITH STANDARD 90 DEGREE BENDS.

C. PROVIDE DOWELS INTO FOOTINGS AT WALLS OF SAME SIZE AND SPACING AS WALL VERTICAL REINFORCEMENT.

D. ALL REINFORCEMENT MAY LAP WITH COUPLERS WHICH ARE 125% OF BAR STRENGTH OR GREATER. SUBMIT ICBO REPORT.

6. MINIMUM CONCRETE COVER FOR REINFORCING STEEL:

A. SURFACES PLACED AGAINST EARTH 3"

B. FORMED SURFACES BELOW GRADE 2"

C. SURFACES EXPOSED TO WEATHER 2"

D. BEAM AND COLUMN BARS 1-1/2" (INCLUDING STIRRUPS OR TIES)

E. EXTERIOR WALL AT EXTERIOR FACE 1-1/2"

F. SLABS AND WALLS NOT EXPOSED TO WEATHER 1"

7. FINISH: SLABS S.C.D.

8. EXPANSION ANCHORS SHALL BE HILTI KWIK BOLT TZ (KB-TZ) AS MANUFACTURED BY HILTI CORPORATION OR APPROVED EQUAL. INSTALL PER MANUFACTURER'S RECOMMENDATION.

9. EPOXY FOR DOWELS SHALL BE HILTI-RE 500-SD OR APPROVED EQUAL. EPOXY SHALL DEVELOP 6000 PSI STRENGTH. INSTALL PER MANUFACTURER'S REQUIREMENTS.

STEEL

1. W SECTION: ASTM A992 GR. 50 (RUSTING STEEL).
2. CHANNELS, ANGLES, AND PLATES: ASTM A36, U.O.N.
3. HSS : ASTM A500, GRADE B.
4. PIPES: ASTM A53, GRADE B.
5. HIGH STRENGTH BOLTS: ASTM A325X.
6. MACHINE/CARRIAGE BOLTS: ASTM A307.
7. ANCHOR BOLTS / RODS: ASTM F1554, GR. 36.
8. WELDING ELECTRODES: E-70XX.
9. ALL STEEL SHAPES AND PLATES AND STEEL DECKING EXPOSED TO WEATHER OR UNHEATED SPACES SHALL BE HOT DIPPED GALVANIZED IN ACCORDANCE WITH G90 GALVANIZATION. TOUCH UP WELDED AREAS WITH GALV WELD REPAIR. PAINT EXPOSED SURFACES WITH EPOXY PAINT SYSTEMS AS REQUIRED BY ARCHITECTURAL DRAWINGS OR WEATHERING STEEL PER ASTM A588.

EPOXY ANCHORS

1. EPOXY ANCHOR INSTALLATION VALUES:

PULL TEST VALUES FOR EPOXY ANCHORS IN CONCRETE		
THREADED ROD DIAMETER (in.)	REBAR SIZE	MIN. EMBED. (in.)
⅜	#3	4
½	#4	4½
⅝	#5	6
¾	#6	7
⅞	#7	8
1	#8	9

2. EPOXY SHALL BE HILTI RE-500-SD PER ICC ESR-2322 OR SIMPSON SET-XP PER ICC ESR-2508. INSTALLATION SHALL COMPLY WITH LATEST ICC REPORT.
3. CARBON STEEL THREADED RODS SHALL CONFORM TO ASTM A193 GRADE B7. REINFORCING BARS SHALL COMPLY WITH ASTM A615 GRADE 60.
4. SPECIAL INSPECTION OF ANCHORS IS REQUIRED AND SHALL COMPLY WITH CBC CHAPTER 17. THE SPECIAL INSPECTOR MUST BE ON THE JOB SITE PERIODICCALLY DURING ANCHOR INSTALLATION TO VERIFY ANCHOR TYPE, ANCHOR DIMENSION, CONCRETE STRENGTH AND TYPE, HOLE DIMENSION AND CLEANLINESS, ANCHOR SPACING AND EDGE DISTANCE, CONCRETE THICKNESS, ANCHOR EMBEDMENT AND TIGHTENING TORQUE. THE SPECIAL INSPECTOR MUST VERIFY THE INITIAL INSTALLATIONS OF EACH TYPE AND SIZE BY CONSTRUCTION PERSONNEL ON SITE. SUBSEQUENT INSTALLATIONS OF SIMILAR ANCHORS BY THE SAME CONSTRUCTION PERSONNEL MAY BE PERFORMED IN THE ABSENCE OF THE SPECIAL INSPECTOR.
5. WHEN INSTALLING DRILLED-IN ANCHORS IN EXISTING NON-PRESTRESSED REINFORCED CONCRETE, USE CARE AND CAUTION TO AVOID CUTTING OR DAMAGING THE EXISTING REINFORCING BARS. WHEN INSTALLING ANCHORS INTO EXISTING PRESTRESSED CONCRETE (PRE OR POST TENSIONED), LOCATE THE PRESTRESSED TENDONS BY USING A NON DESTRUCTIVE METHOD PRIOR TO INSTALLATION. EXCERCISE EXTREME CARE AND CAUTION TO AVOID CUTTING OR DAMAGING THE TENDONS DURING INSTALLATION.MAINTAIN A MINIMUM CLEARANCE OF ONE INCH BETWEEN THE REINFORCEMENT AND THE DRILLED-IN ANCHORS.

WOOD

1. SAWN FRAMING LUMBER - REDWOOD;

A. HEADERS AND JOISTS DECKING: NO. 1 OR BETTER.

B. POSTS AND BEAMS: NO. 1.

C. STUDS: NO. 2.

D. PLATES AND BLOCKING: NO. 2.

E. ALL LUMBER IN CONTACT WITH CONCRETE OR MASONRY TO BE PRESSURE PRESERVATIVE TREATED.

2. FRAMING HARDWARE: AS MANUFACTURED BY SIMPSON CO. OR APPROVED EQUAL. SIMPSON DESIGNATIONS USED.
3. NAILS: COMMON WIRE GAGE U.N.O. NAILING TO CONFORM TO CBC TABLE 2304.9.1 U.N.O.
4. BOLTS: ASTM A307.
5. FASTENERS IN PRESERVATIVE TREATED WOOD SHALL BE HOT DIPPED GALVANIZED.

GENERAL

1. DRAWINGS AND SPECIFICATIONS REPRESENT FINISHED STRUCTURE. CONTRACTOR SHALL BE RESPONSIBLE FOR MEANS AND METHODS OF CONSTRUCTION, INCLUDING BUT NOT LIMITED TO SHORING AND TEMPORARY BRACING. THE CONTRACTOR SHALL TAKE ALL NECESSARY MEASURES TO INSURE SAFETY OF ALL PERSONS AND STRUCTURES AT THE SITE AND ADJACENT TO THE SITE. OBSERVATION VISITS TO THE SITE BY THE ARCHITECT, ENGINEER OR CONSTRUCTION MANAGER SHALL NOT RELIEVE THE CONTRACTOR OF SUCH RESPONSIBILITY.
2. OMISSIONS OR CONFLICTS BETWEEN VARIOUS ELEMENTS OF THE DRAWINGS, NOTES, AND DETAILS SHALL BE BROUGHT TO THE ATTENTION OF THE ARCHITECT AND RESOLVED BEFORE PROCEEDING WITH THE WORK.
3. DO NOT USE SCALED DIMENSIONS; USE WRITTEN DIMENSIONS. WHERE NO DIMENSION IS PROVIDED, CONSULT THE CIVIL ENGINEER FOR CLARIFICATION BEFORE PROCEEDING WITH THE WORK.
4. IF CERTAIN FEATURES ARE NOT FULLY SHOWN OR CALLED FOR ON THE DRAWINGS OR SPECIFICATIONS, THEIR CONSTRUCTION SHALL BE OF THE SAME CHARACTER AS FOR SIMILAR CONDITIONS THAT ARE CALLED FOR OR SHOWN. ALL DETAILS REFERENCED ONCE SHALL APPLY TO ALL SIMILAR CONDITIONS.
5. IT SHALL BE THE CONTRACTOR'S RESPONSIBILITY TO OBTAIN ALL NECESSARY LICENSES AND PERMITS. THE CONTRACTOR SHALL CONFORM TO ALL STATE AND LOCAL LAWS GOVERNING THE WORK.
6. ALL CONSTRUCTION TO BE PERFORMED IN A MANNER TO MINIMIZE IMPACT ON THE CONTINUING OPERATION OF THE BUILDING. CONTRACTOR TO PROVIDE APPROPRIATE BARRIERS BETWEEN CONSTRUCTION SITE AND REMAINDER OF BUILDING.
7. THE CONTRACTOR SHALL VERIFY THE LOCATION OF EXISTING UTILITIES BEFORE BEGINNING WORK. SPECIAL CARE SHALL BE TAKEN TO PROJECT UTILITIES THAT ARE TO REMAIN IN SERVICE DURING CONSTRUCTION.
8. THE FOUNDATION BEARING SOIL SHALL BE OBSERVED BY OWNER'S GEOTECHNICAL ENGINEER.
9. ALL FINISHES, STRUCTURAL ELEMENTS AND ARCHITECTURAL FEATURES AFFECTED BY CONSTRUCTION TO BE REPAIRED AND/OR REPLACED TO MATCH EXISTING CONSTRUCTION.

DESIGN BASIS

1. APPLICABLE CODE: CALIFORNIA BUILDING CODE, 2013 EDITION.
2. WIND LOADS:

DESIGN WIND: 115 MPH, EXPOSURE C

3. SEISMIC LOADS:

SEISMIC IMPORTANCE FACTOR I=1.0
SITE CLASS D
SEISMIC DESIGN CATEGORY D

S_S = 1.500; S_1 = 0.664
F_a = 1.0; F_v = 1.5
S_{DS} = 1.000
S_{D1} = 0.664

FOUNDATIONS

1. SIZES OF FOOTINGS AND ELEVATIONS AT BOTTOMS OF FOOTINGS HAVE BEEN ESTABLISHED BASED ON THE SOILS REPORT FILE NUMBER 1912.01altr.doc. PREPARED BY MILLER PACIFIC ENGINEERING GROUP AND DATED JUNE 7 2013.
2. FOOTINGS SHALL EXTEND A MINIMUM OF 18 INCHES BELOW LOWEST ADJACENT GRADE AND BEAR ONLY ON RECOMPACTED FILL OR NATIVE SOIL.
3. EXCAVATIONS SHALL BE MADE AS NEAR AS POSSIBLE TO THE NEAT LINES REQUIRED BY THE SIZE AND SHAPE OF THE STRUCTURE. NO MATERIAL IS TO BE EXCAVATED UNNECESSARILY.
4. ALLOWABLE SOIL BEARING PRESSURES ARE:

A. DEAD + LIVE LOADS: 1500 PSF

5. ALL FOUNDATION EXCAVATIONS MUST BE REVIEWED AND APPROVED BY THE SOILS ENGINEER PRIOR TO PLACEMENT OF CONCRETE.
6. VERIFY LOCATION OF UNDERGROUND UTILITIES BEFORE EXCAVATION. NOTIFY CIVIL ENGINEER PRIOR TO EXCAVATION IN THE EVENT SUCH UTILITIES ARE ENCOUNTERED.
7. FOR DRAINAGE DETAILS, SUMPS, PITS, DAMP PROOFING, TRENCHES, CURBS, EXTERIOR WALKS, UTILITIES, EQUIPMENT DETAILS, STEPS, ETC., SEE DRAWINGS OTHER THAN STRUCTURAL.
8. PLACEMENT OF FILL AND RE-COMPACTION OF NATIVE SOILS SHALL BE IN ACCORDANCE WITH THE SOILS REPORTS LISTED.

CONCRETE

1. CONCRETE CLASSES:

CLASS	USE	UNIT WT	28 DAY STRENGTH	SLUMP	MAX AGG SIZE	W/C RATIO
A	RETAINING WALL, FOUNDATIONS	145 PCF	3000 PSI	3½ ±½"	¾"	.5
B	PILES	145 PCF	4000 PSI	3½ ±½"	¾"	.45

2. CONCRETE MIXING SHALL COMPLY WITH ASTM C94. ALL CONCRETE SHALL SUBSTITUTE 30% FLY ASH FOR CEMENT BY WEIGHT.
3. ALL CONCRETE SHALL BE THOROUGHLY CONSOLIDATED. TYPE II CEMENT FOR CONCRETE IN CONTACT W/ SOIL.
4. REINFORCING STEEL:

A. BARS: ASTM A615, GRADE 60.

B. ALL CONCRETE SHALL BE REINFORCED UNLESS SPECIFICALLY MARKED "NOT REINFORCED".

5. TERMINATION OF REINFORCEMENT

A. TERMINATE ALL BARS IN LAPS, 90 DEGREE BENDS, OR WITH DOWELS INTO EXISTING CONCRETE.

B. BEND BOTTOM FOOTING BARS UP WITH STANDARD 90 DEGREE BENDS.

C. PROVIDE DOWELS INTO FOOTINGS AT WALLS OF SAME SIZE AND SPACING AS WALL VERTICAL REINFORCEMENT.

D. ALL REINFORCEMENT MAY LAP WITH COUPLERS WHICH ARE 125% OF BAR STRENGTH OR GREATER. SUBMIT ICBO REPORT.

CONSTRUCTION SET

REVISIONS

NO.	DESCRIPTION	BY	DATE	APPV'D
1				
2				
3				
4				
5				

KPW STRUCTURAL ENGINEERS, INC
55 HARRISON STREET
SUITE 550
OAKLAND CA 94607
V. 510 208-3300
F. 510 208-3303
WWW.KPWSE.COM

DRAWN: BTV
CHECKED: AAR
DESIGNED: AAR
APPROVED: JTP

CITY OF MILL VALLEY - MILLER AVENUE
STREETSCAPE IMPROVEMENT PROJECT

GENERAL NOTES

DATE 03/24/16
SCALE AS SHOWN
BKF PROJECT NO. 20125184-10
CLIENT CITY OF MILL VALLEY
SHEET NO. 202 OF 221
DRAWING NO. SR-01

L:\Projects\2016 Projects\16C105\Struct\16C105-S01.dwg Mar 16, 2016 - 4:42pm PIL

AS-BUILTS

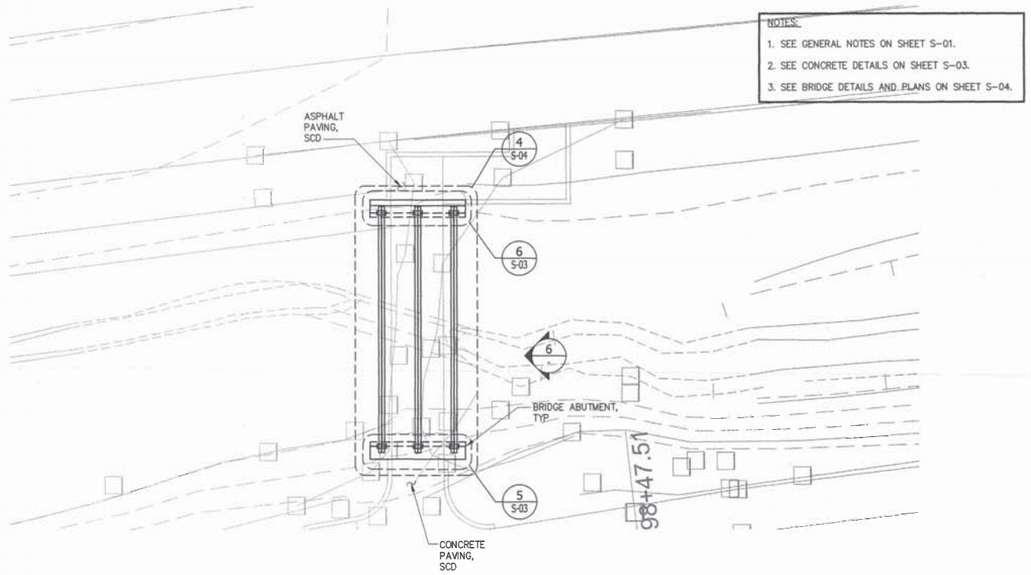

4 FOUNDATION AND BRIDGE PLAN

Scale: 1/8"=1'-0"

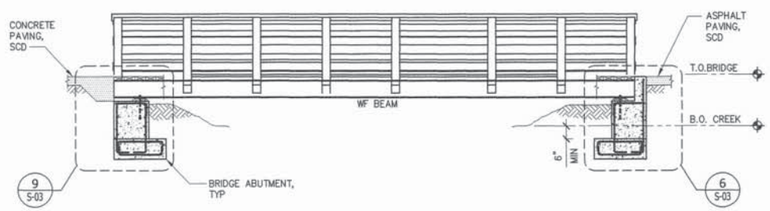

6 BRIDGE ELEVATION

Scale: 1/4"=1'-0"

CONSTRUCTION SET

REVISIONS

NO.	DESCRIPTION	DATE	BY	APPVD
1				
2				
3				
4				
5				

JAMES P. PASSARELLA — No. 34541 — Exp. 6-30-17 — REGISTERED PROFESSIONAL ENGINEER — STATE OF CALIFORNIA — STRUCTURAL

KPFF CONSULTING ENGINEERS
55 Harrison Street Suite 550
Oakland, CA 94607
v. 510 208-3300
f. 510 208-3303
www.kpff.com
STRUCTURAL ENGINEERS, INC.

DRAWN: BTV | CHECKED: AAR | DESIGN: AAR | APPROVED: JTP

CITY OF MILL VALLEY - MILLER AVENUE
STREETSCAPE IMPROVEMENT PROJECT

FOUNDATION PLAN & ELEVATION

DATE 03/24/16 | SCALE AS SHOWN

BKF PROJECT NO. 20125184-10

CLIENT CITY OF MILL VALLEY

SHEET NO. 203 OF 221

DRAWING NO. SR-02

L:\Projects\2016 Projects\16C105\Struct\16C105-S02.dwg Mar 16, 2016 - 4:42pm PIL

AS-BUILTS

REBAR SIZE	MAIN REINFORCING			STIRRUPS & TIES		
	D	180° HOOK L	90° HOOK L	D	90° HOOK L	135° HOOK L
#3	2¼"	4"	6"	1½"	3¾"	3"
#4	3"	4½"	8"	2"	4½"	3"
#5	3¾"	5"	10"	2½"	5¾"	3¾"
#6	4½"	6"	12"	4½"	12"	4½"
#7	5¼"	7"	14"	5¼"	14"	5¼"
#8	6"	8"	16"	6"	16"	6"
#9	9½"	10¼"	19½"			
#10	10¾"	11½"	22"			
#11	12"	12¾"	24¼"			
#14	18¼"	17"	31¼"			

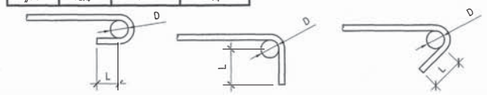

A 180° HOOK B 90° HOOK C 135° HOOK

1 TYPICAL REBAR BENDS AND HOOKS

Scale: NTS

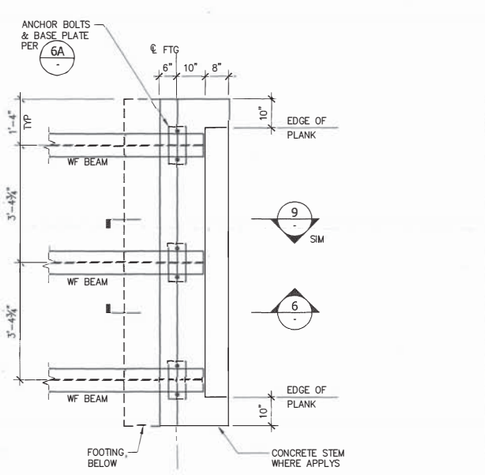

5 ABUTMENT PLAN

Scale: 1/2"=1'-0"

CONCRETE STRENGTH	f'c = 3000 PSI				f'c = 4000 PSI			
CLASS OF LAP SPLICE	CLASS "A"		CLASS "B"		CLASS "A"		CLASS "B"	
BAR SIZE \ CASE	BOTTOM BARS	TOP BARS	BOTTOM BARS	TOP BARS	BOTTOM BARS	TOP BARS	BOTTOM BARS	TOP BARS
#3	1'-4"	1'-9"	1'-9"	2'-4"	1'-2"	1'-6"	1'-6"	2'-0"
#4	1'-10"	2'-4"	2'-4"	3'-1"	1'-7"	2'-1"	2'-4"	3'-1"
#5	2'-1"	3'-0"	3'-0"	3'-10"	2'-0"	2'-7"	3'-0"	3'-10"
#6	2'-9"	3'-7"	3'-7"	4'-8"	2'-4"	3'-1"	3'-7"	4'-8"
#7	4'-0"	5'-2"	5'-2"	6'-9"	3'-6"	4'-6"	5'-2"	6'-9"
#8	4'-7"	5'-11"	5'-11"	7'-9"	3'-11"	5'-2"	5'-11"	7'-9"
#9	5'-2"	6'-10"	6'-10"	8'-8"	4'-5"	5'-9"	6'-8"	8'-8"
#10	5'-8"	7'-11"	7'-11"	9'-8"	4'-11"	6'-5"	7'-5"	9'-8"
#11	6'-3"	8'-2"	8'-2"	10'-7"	5'-5"	7'-1"	8'-2"	10'-7"



NOTES:

1. USE THE CLASS B LAP SPLICE LENGTHS, MULTIPLIED BY THE APPLICABLE FACTOR(S) LISTED BELOW, UNLESS OTHERWISE NOTED.
2. WHERE THE CLEAR SPACING OF BARS BEING SPLICED IS LESS THAN 2 BAR DIAMETERS, INCREASE THE LAP BY 50%
3. WHERE THE BAR COVER IS LESS THAN OR EQUAL TO THE BAR DIAMETER, INCREASE THE LAP LENGTH BY 50%
4. CLASS A SPLICES MAY ONLY BE USED WHERE NOTED ON THE DRAWINGS.
5. TOP BARS ARE ALL HORIZONTAL BARS WITH MORE THAN 12 INCHES OF CONCRETE CAST BELOW THE BARS.
6. LAP SPLICE LENGTHS IN TABLE ARE FOR NORMAL WEIGHT CONCRETE. WHERE LIGHTWEIGHT CONCRETE IS USED, INCREASE LAP SPLICE LENGTHS BY 30%
7. SPLICES OF HORIZONTAL REINFORCEMENT IN WALLS SHALL BE STAGGERED.
8. SPLICES OF HORIZONTAL REINFORCEMENT IN WALLS CONTAINING TWO CURTAINS OF REINFORCEMENT SHALL NOT OCCUR IN THE SAME LOCATION.

2 LAP SPLICE LENGTHS AND DEVELOPMENT

Scale: NTS

NOTE: FOR INFO NOT SHOWN, SEE 6

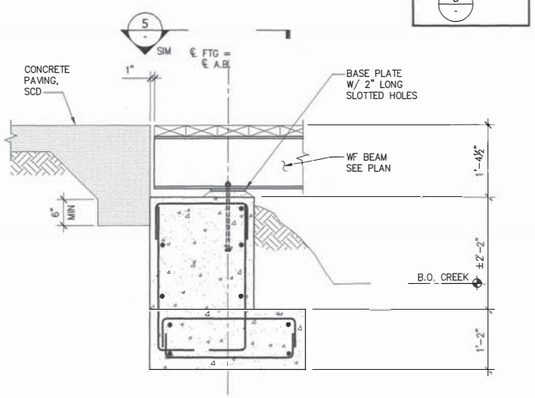

9 SECTION - SOUTH ABUTMENT

Scale: 3/4"=1'-0"

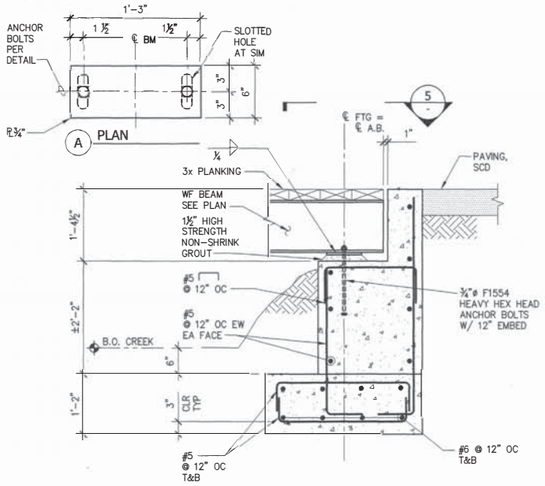

6 SECTION - NORTH ABUTMENT

Scale: 3/4"=1'-0"

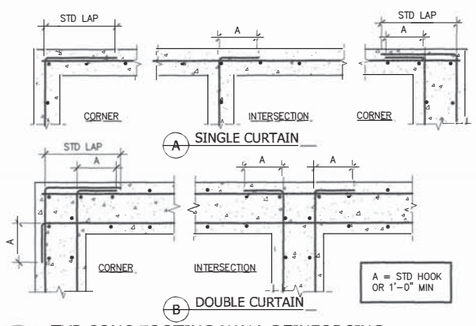

3 TYP CONC FOOTING/WALL REINFORCING AT CORNERS AND INTERSECTIONS

Scale: NTS

CONSTRUCTION SET

REVISIONS

NO.	DESCRIPTION	BY	DATE	APPVD
1				
2				
3				
4				
5				
6				

PROFESSIONAL ENGINEER REGISTERED IN THE STATE OF CALIFORNIA — JAMES A. PASSOVOY — NO. 5841 — EXP. 6-30-17 — CIVIL

KPW
55 Harrison Street
Suite 550
Oakland, CA 94607
v 510 208-3300
f 510 208-3535
www.kpweng.com
STRUCTURAL ENGINEERS, INC.

DRAWN: BTV CHECKED: AAR
QUALITY CONTROL: AAR APPROVED: JTP

CITY OF MILL VALLEY - MILLER AVENUE
STREETSCAPE IMPROVEMENT PROJECT

FOUNDATION DETAILS

DATE 03/24/16 SCALE AS SHOWN

20125184-10

CLIENT CITY OF MILL VALLEY

SHEET NO. 203 OF 221

DRAWING NO. SR-03

L:\Projects\2016 Projects\160105\Struct\160105-S03.dwg Mar 16, 2016 - 4:42pm PTL

AS-BUILTS

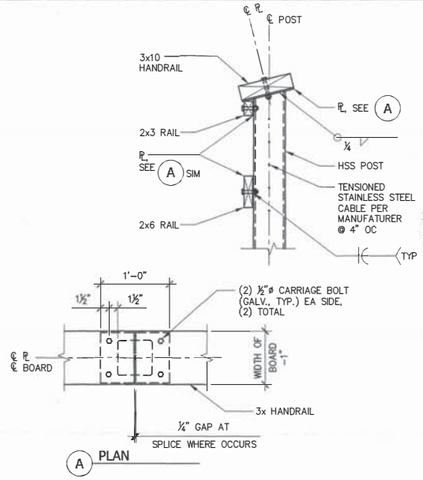

7 SECTION AT HANDRAIL

Scale: 1"=1'-0"

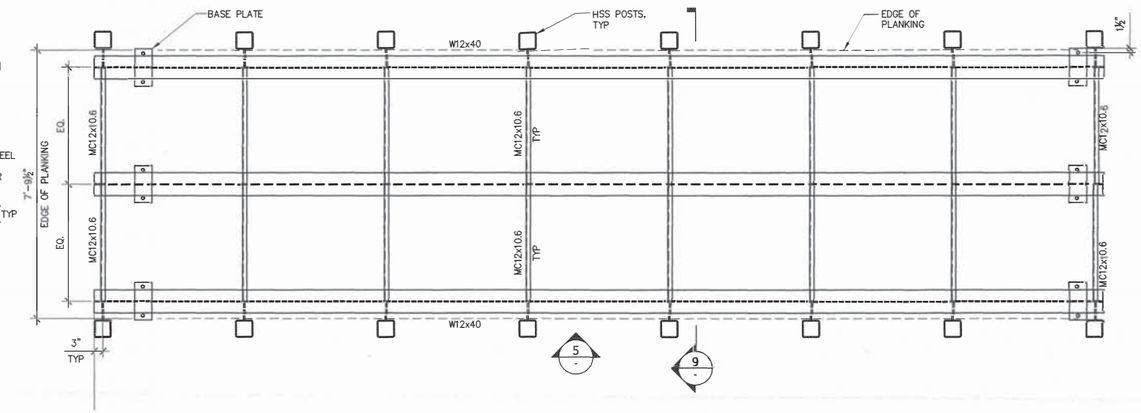

4 BRIDGE PLAN VIEW

Scale: 1/2"=1'-0"

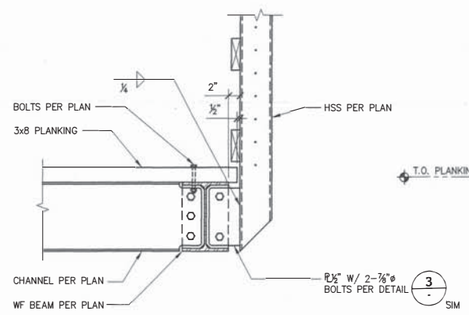

8 HANDRAIL POST CONNECTION TO BEAM

Scale: 1"=1'-0"

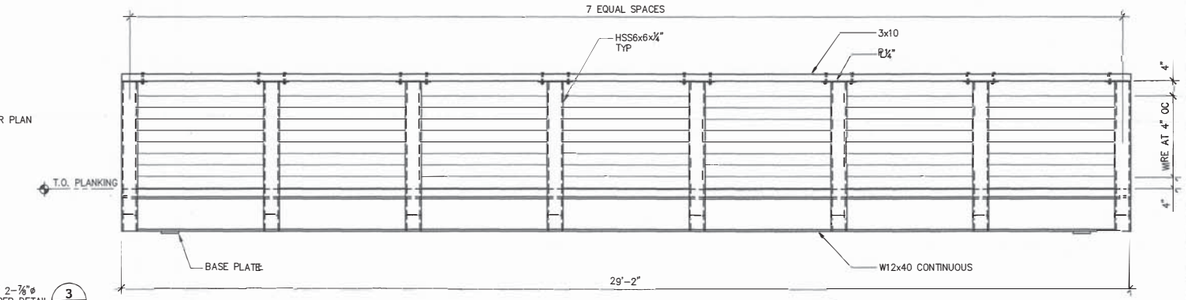

5 BRIDGE ELEVATION

Scale: 1/2"=1'-0"

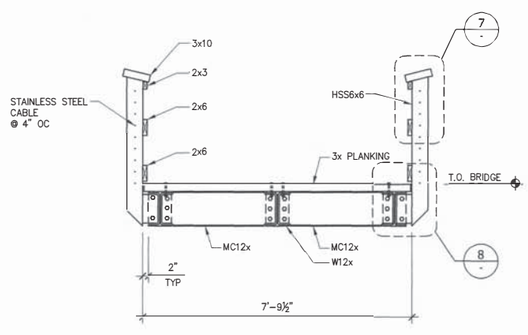

9 BRIDGE SECTION

Scale: 1/2"=1'-0"

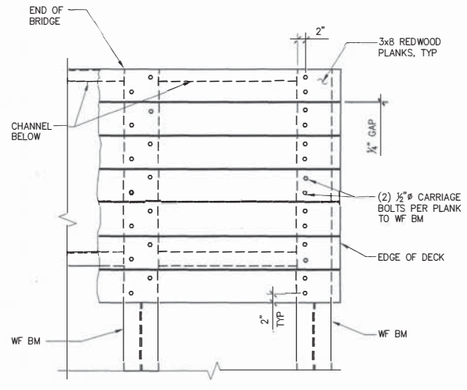

6 PLANKING PLAN

Scale: N.T.S.

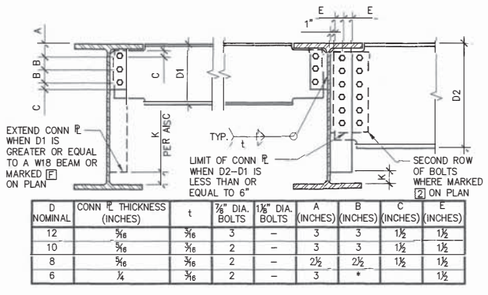

D NOMINAL	CONN ℄ THICKNESS (INCHES)	t	⅞" DIA. BOLTS	1⅛" DIA. BOLTS	A (INCHES)	B (INCHES)	C (INCHES)	E (INCHES)
12	9/16	3/16	3	–	3	3	1½	1½
10	9/16	3/16	2	–	3	3	1½	1½
8	9/16	3/16	2	–	2½	2½	1½	1½
6	¼	3/16	2	–	3	*		1½

NOTES:
1. ALL BOLTS SHALL BE A325X.
   * PLACE TWO BOLTS HORIZONTALLY IN ONE ROW.
2. SEE PLAN FOR LOCAL, NON-TYPICAL CONDITIONS, MARKED BY W FOR INCREASED WELD SIZE, 1 FOR INCREASED BOLT DIA, & 2 FOR 2 ROWS OF BOLTS

3 TYPICAL BOLTING SCHEDULE

Scale: NTS

CONSTRUCTION SET

REVISIONS

NO.	DESCRIPTION	BY	DATE	APP'D
1				
2				
3				
4				
5				

KPFF CONSULTING ENGINEERS
STRUCTURAL ENGINEERS, INC.
55 HAWTHORN STREET SUITE 500
OAKLAND, CA 94607
T. 510 208-3300
F. 510 208-3303
WWW.KPFF.COM
DRAWN: BTV
DESIGNED: AAR
CHECKED: AAR
APPROVED: JTP

CITY OF MILL VALLEY - MILLER AVENUE
STREETSCAPE IMPROVEMENT PROJECT

STEEL DETAILS

DATE 03/24/16
SCALE AS SHOWN
BKF PROJECT NO. 20125184-10
CLIENT CITY OF MILL VALLEY
SHEET NO. 204 OF 221
DRAWING NO. SR-04

L:\Projects\2016 Projects\160105\Struct\160105-S04.dwg Mar 16, 2016 - 4:42pm PIL

MILL VALLEY STRUCTURE NO. 110

STRUCTURE NO. 110 - PEDESTRIAN CROSSING CULVERT AT TRIBUTARY TO ARROYO CORTE MADERA DEL PRESIDIO



Photo 1 – Street level Looking East



Photo 2 – Street level Looking West

SUMMARY & RECOMMENDATIONS

The Bridge was visually inspected by Manouchehr Mahmoudzadeh, PE, on April 28, 2020.

The field notes and photos are recorded in the subsequent pages of this section.

General Observations

The culvert, an 18" ϕ corrugated metal pipe perpendicular to Miller Avenue, is likely over 30 years old and in good condition. It is located in a V-ditch that pours into Corte Madera Creek and is subject to tidal flows. There is a very thin layer of soil and AC over the culvert and no need for headwalls at its inlet or outlet. The culvert is partially blocked by weeds and mud. This pedestrian crossing is closed / blocked by a gate to foot and bike traffic.

Structure's Qualitative Health & Serviceability Condition Score (0-100): < 60

Qualitative Estimate of Structure's Safe Remaining Life: < 20 years

Recommendations

Clear the vegetation and mud to facilitate flow of water in the creek.

Urgency of Maintenance Needs

The work on the recommended action should be scheduled as routine maintenance.

Approximate Cost of Rehabilitation or Repairs : None

FIELD OBSERVATION NOTES

Observation Date and Time: 4-28-20, 12:40 p.m. Caltrans District: 4 County: Marin

Facility Carried: Pedestrian/Bike Feature Intersected: Arroyo Corte Madera Trib. Bridge ☐ Culvert ☒

Mill Valley Crossing No: 110 Caltrans Bridge No: _____ Year Built: _____

Total Width: ___ Total Length: 20' No. of Spans (Bridge): ___ No. of Chambers (Culvert): 1

Site Coordinates (Apple iPhone): 37° 54' 22" N & 122° 31' 27" W Weather: Sunny & Clear

Street Posted for: Truck Weight Limit ☐ Speed Limit ☐ Nearest Postal Address At Miller Avenue

SUPERSTRUCTURE AND TOPSIDE COMPONENTS	DESCRIPTION	CONDITION REMARKS
Superstructure Basics	• Structure Type & Materials: CMP Culvert • Alignment: Curved ☐ Tangent ☒ • Superstructure Depth: n/a • Span Lengths: n/a • Waterway Opening Height: • Skew at Abutments: 0° • Curb-to-Curb Width: n/a • Expansion Joints: n/a • Culvert ϕ or Dimensions: 18"	CMP: Corrugated Metal Pipe
Railings, Sidewalks & Curbs	• Railing Type: Timber Left: Right: • Railing Height: Left: Right: • Sidewalks on ____ side(s) • Width of Sidewalk: Left: Right: • Curb Height: 8" (culvert parapet) • Median Barrier: Yes ☐ No: ☒	There are no railings on this small culvert crossing
Deck / Travelway Surface	• AC ☒ Concrete ☐ Wood ☐	AC surfacing is in good condition
Span Hinges	• None ☐	n/a
Restrainers	At: Abutments ☐ Bents ☐ None ☐	n/a
Soffit Opening Locations	• None ☐	n/a
Traffic Lanes on Bridge	No. of Traffic Lanes: Pedestrian Crossing • Width of Median: • Width of Shoulder, Left: Right:	Miller Ave Park bile trial crossing closed to traffic
Approaches	• Approach Slab at: BB ☐ EB ☐ None ☒ • No. of Traffic Lanes: Ped crossing • Width of Median: None • Width of Shoulder: Left: Right: • Width of Sidewalk: Left: Right: • Railing Type: None Left Right • Railing Height: Left: Right:	

SUBSTRUCTURE AND UNDERSIDE COMPONENTS	DESCRIPTION	CONDITION REMARKS
Abutments Types & Wingwalls	• Abutment Types: • Integral wingwalls ☐ and/ or Headwalls: ☐	n/a
Bent	• Materials: • Number of bents: • Pier Wall Type ☐ Column Type ☐ • X-sectional Dimensions: • Skew at Bents:	n/a
Piling	• Not Visible ☐ Pile Type: • Pile Extension:	n/a
Abutment and/or Bent Footings	• Footings: Visible ☐ Not Visible ☐ • Invert slab: Yes ☐ No ☐	n/a
Embankment Condition and Erosion Control Measures	Natural ground covered with vegetation south end. Concrete channel lining at the north end.	
Road Under the Bridge	• None ☐ • No. of Traffic Lanes: • Width of Median: • Width of Shoulder: Left: Right • Width of Sidewalk: Left: Right	n/a

MISCELLANEOUS FEATURES	DESCRIPTION	REMARKS
Evidence of Previous Work	☐ Seismic Retrofit ☐ Rehab & Repairs	
Visible Utilities	• Gas ☐ Water ☐ Sewer ☐ • Electrical ☐ Telecommunication ☐ • Other Utilities: • Structure Lighting: • Manhole on Deck:	
Availability of Detours	Detour possible	
Drainage Facilities on Structure	• None ☒ •	
Drainage Facilities Under Structure	None	
Existing Facilities at Structure	• Retaining Walls: None ☒ Integral ☐ Near Abuts ☐	
Visual Hydraulic Assessment – Fish Passage	Flow present ☒ Fish Spawning Route ☐	



Photo 3 – View of debris around the culvert looking east



Photo 4 – View of debris around the culvert looking west

MILL VALLEY STRUCTURE NO. 111

STRUCTURE NO. 111 - PEDESTRIAN CROSSING CULVERT AT TRIBUTARY TO ARROYO CORTE MADERA DEL PRESIDIO



Photo 1 – Street Level Looking West



Photo 2 – Street Level Looking East

SUMMARY & RECOMMENDATIONS

The Bridge was visually inspected by Manouchehr Mahmoudzadeh, PE, on April 28, 2020.

The field notes and photos are recorded in the subsequent pages of this section.

General Observations

The culvert at Miller Avenue, a 24" ϕ corrugated metal pipe, is likely over 30 years old and in good condition. It is located in a V-ditch that joins Corte Madera Creek and is subject to tidal flows. There is a very thin layer of soil and AC over the culvert and no need for headwalls at its inlet or outlet. The culvert is partially blocked by weeds and mud.

Structure's Qualitative Health & Serviceability Condition Score (0-100): < 80

Qualitative Estimate of Structure's Safe Remaining Life: < 35 years

Recommendations

Clear the vegetation and mud to facilitate flow of water in the creek.

Urgency of Maintenance Needs

The work on the recommended action should be scheduled as routine maintenance.

Approximate Cost of Rehabilitation or Repairs: None

FIELD OBSERVATION NOTES

Observation Date and Time: 4-28-20, 12:30 p.m. Caltrans District: 4 County: Marin

Facility Carried: Pedestrian/Bike Feature Intersected: Arroyo Corte Madera Trib. Bridge ☐ Culvert ☒

Mill Valley Crossing No: 111 Caltrans Bridge No: _____ Year Built: _____

Total Width: ___ Total Length: 20' No. of Spans (Bridge): ___ No. of Chambers (Culvert): 1

Site Coordinates (Apple iPhone): 37° 53' 14" N & 122° 31' 29" W Weather: Sunny & Clear

Street Posted for: Truck Weight Limit ☐ Speed Limit ☐ Nearest Postal Address At Miller Avenue

SUPERSTRUCTURE AND TOPSIDE COMPONENTS	DESCRIPTION	CONDITION REMARKS
Superstructure Basics	• Structure Type & Materials: RCP Culvert • Alignment: Curved ☐ Tangent ☒ • Superstructure Depth: n/a • Span Lengths: n/a • Waterway Opening Height: 24" • Skew at Abutments: 0° • Curb-to-Curb Width: n/a • Expansion Joints: n/a • Culvert ϕ or Dimensions: 24"	RCP: Reinforced Concrete Pipe
Railings, Sidewalks & Curbs	• Railing Type: Timber Left: Right: • Railing Height: Left: Right: • Sidewalks on ____ side(s) • Width of Sidewalk: Left: Right: • Curb Height: 8" (culvert parapet) • Median Barrier: Yes ☐ No: ☒	There are no railings on this culvert crossing
Deck / Travelway Surface	• AC ☐ Concrete ☒ Wood ☐	Surfacing consist of small red pavers
Span Hinges	• None ☐	n/a
Restrainers	At: Abutments ☐ Bents ☐ None ☐	n/a
Soffit Opening Locations	• None ☐	n/a
Traffic Lanes on Bridge	No. of Traffic Lanes: Pedestrian Crossing • Width of Median: • Width of Shoulder, Left: Right:	Miller Ave Park bile trial crossing
Approaches	• Approach Slab at: BB ☐ EB ☐ None ☒ • No. of Traffic Lanes: Pedestrians only • Width of Median: None • Width of Shoulder: Left: Right: • Width of Sidewalk: Left: Right: • Railing Type: None Left Right • Railing Height: Left: Right:	

SUBSTRUCTURE AND UNDERSIDE COMPONENTS	DESCRIPTION	CONDITION REMARKS
Abutments Types & Wingwalls	• Abutment Types: • Integral wingwalls ☐ and/ or Headwalls: ☐	n/a
Bent	• Materials: • Number of bents: • Pier Wall Type ☐ Column Type ☐ • X-sectional Dimensions: • Skew at Bents:	n/a
Piling	• Not Visible ☐ Pile Type: • Pile Extension:	n/a
Abutment and/or Bent Footings	• Footings: Visible ☐ Not Visible ☐ • Invert slab: Yes ☐ No ☐	n/a
Embankment Condition and Erosion Control Measures	Natural ground covered with vegetation at south end, concrete channel lining at the north end.	
Road Under the Bridge	• None ☐ • No. of Traffic Lanes: • Width of Median: • Width of Shoulder: Left: Right • Width of Sidewalk: Left: Right	n/a

MISCELLANEOUS FEATURES	DESCRIPTION	REMARKS
Evidence of Previous Work	☐ Seismic Retrofit ☐ Rehab & Repairs	
Visible Utilities	• Gas ☐ Water ☐ Sewer ☐ • Electrical ☐ Telecommunication ☐ • Other Utilities: • Structure Lighting: • Manhole on Deck:	
Availability of Detours	Detour possible	
Drainage Facilities on Structure	• None ☒ •	
Drainage Facilities Under Structure	None	n/a
Existing Facilities at Structure	• Retaining Walls: None ☒ Integral ☐ Near Abuts ☐	
Visual Hydraulic Assessment – Fish Passage	Flow present ☒ Fish Spawning Route ☐	



Photo 3 – View of vegetation around the culvert's outlet



Photo 4 – View of vegetation at the culvert's inlet